DWG.#	REV:
38071521	0

REV.	UNIT	DESCRIPTION OF CHANGE	BY	DATE
--	-	--------	---	--/--/--

2007 MODEL YEAR
DIPLOMAT/ENDEAVOR/KNIGHT/AMBASSADOR/SIMBA RD
W/NEW HARNESS SET (AFTER OCT 2006)

REWORK REQUIRED IF BUZZING OF THE LOW BEAM AND FOG LIGHT RLAYS IS NOTICED WHEN INSTALLING THE HAMSAR DRL MODULE.
DRL MODULE #16613917 (HAMSAR # H8014B)

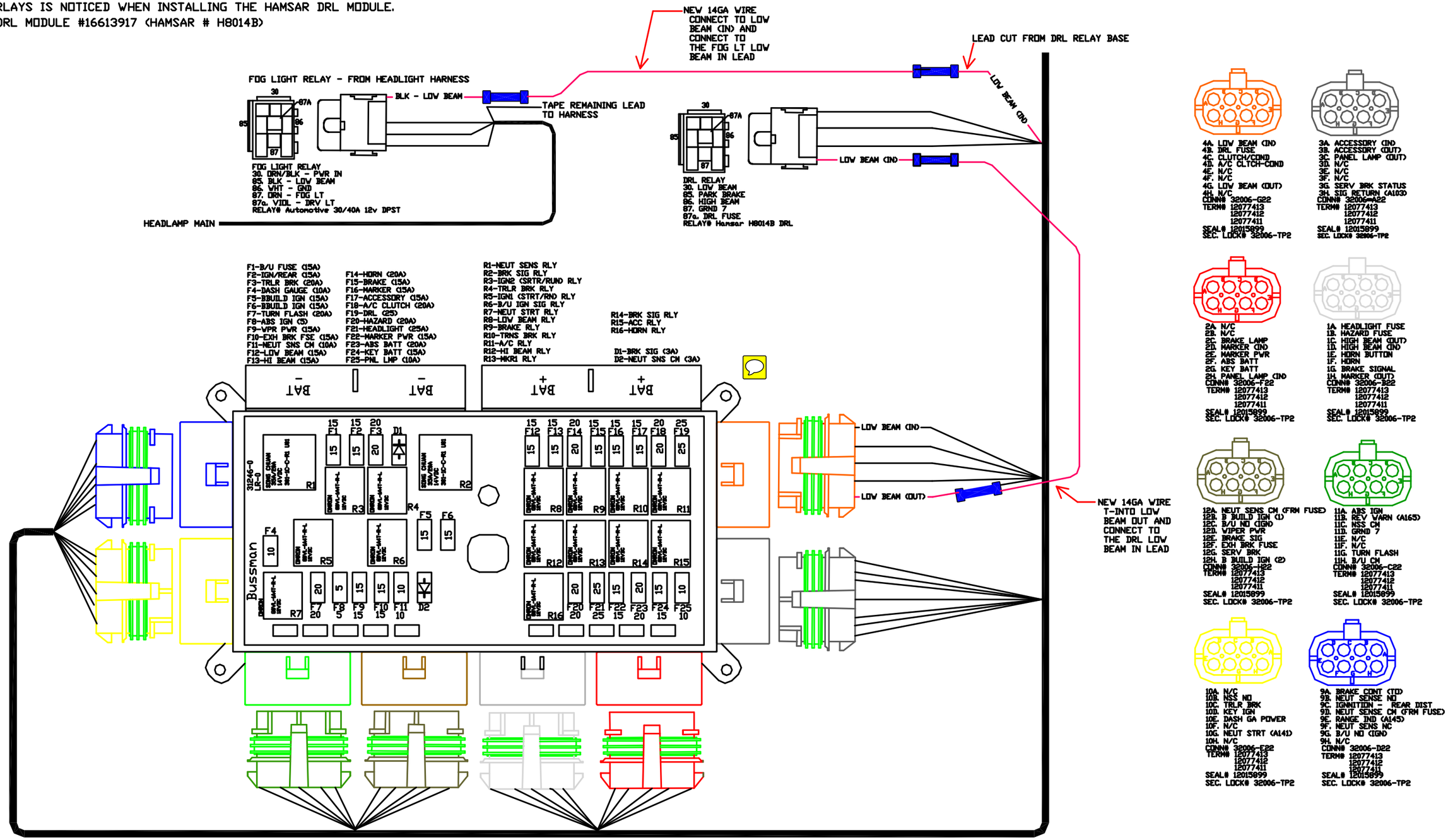

THE MONACO COACH CORP. AND ALL OF ITS SUBSIDIARIES CLAIMS PROPRIETARY RIGHTS IN THE MATERIAL HEREON. NEITHER THIS DRAWING NOR ANY REPRODUCTION THEREOF MAY BE USED TO MANUFACTURE ANYTHING WITHOUT PERMISSION IN WRITING FROM MONACO COACH CORP. OR ANY OF ITS SUBSIDIARIES TO THE USER SPECIFICALLY REFERRING TO THIS DRAWING.

DRAWN BY: R.BUCHERT
DATE: 4/23/07
CHECKED BY:

UNLESS SPECIFIED DIMENSIONS ARE IN INCHES
.XX ±.06 .XXX ±.030
ANGLES (PLUS OR MINUS) 0 ~30'

MONACO COACH CORP
HOLIDAY RAMBLER
DO NOT SCALE DRAWING

TITLE: DIAGRAM, DRL/FOG LIGHT REWORK
SERIES: SEE USAGE
SHEET 1 OF 1
DWG.# 38071521
REV: 0