DWG.# 38060829 REV: 0

REV.	UNIT	DESCRIPTION OF CHANGE	BY	DATE
--	-	--------	---	--/--/--

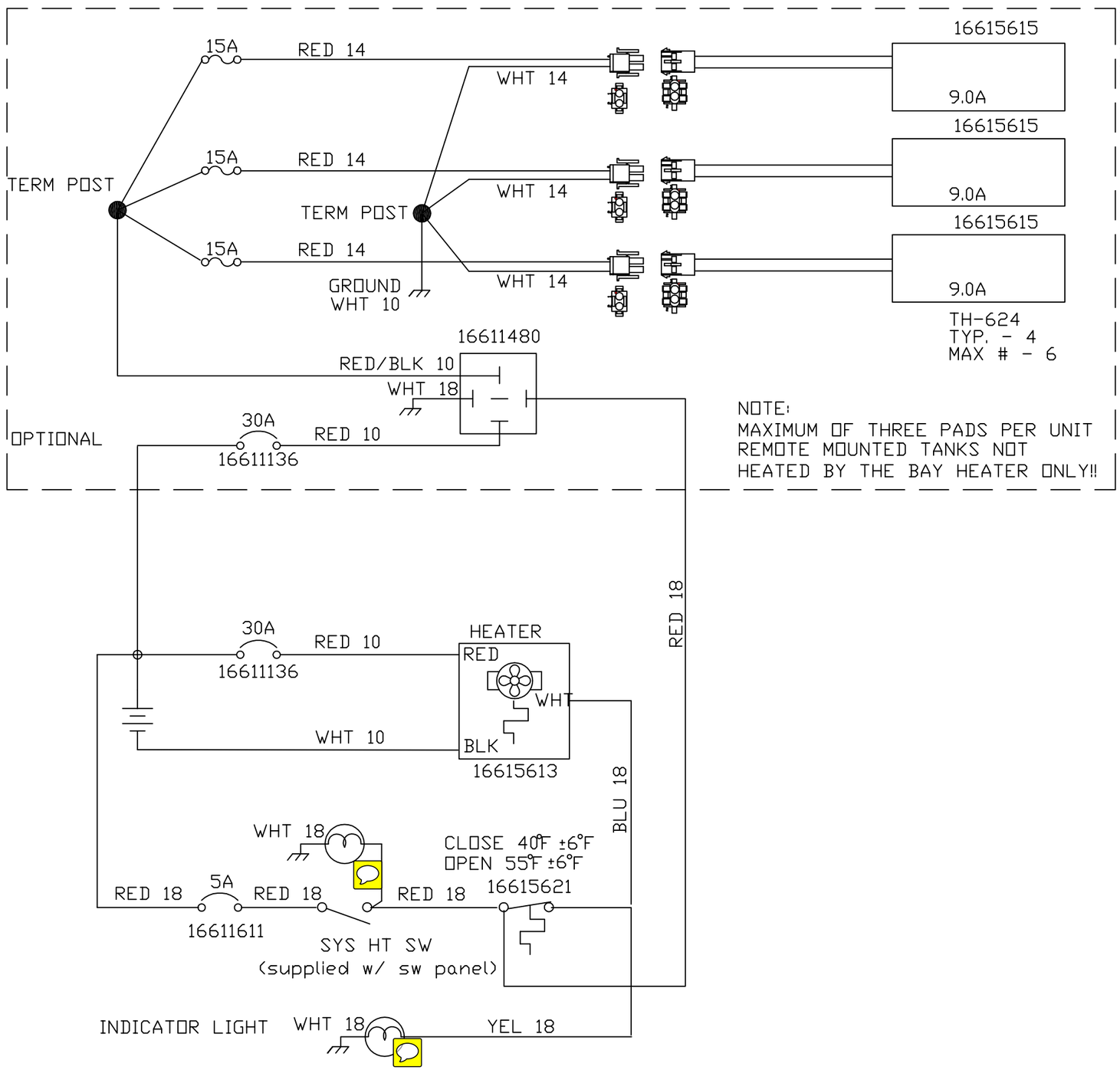

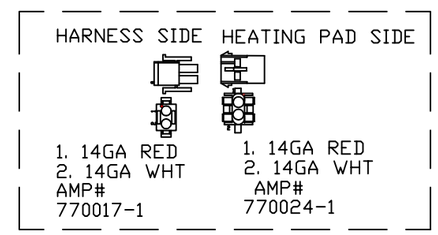

NOTE:

1. BAY HEATER IS STANDARD
2. HEATING PADS ARE OPTIONAL
3. SYST PANEL SW LIGHTS WHEN POWER IS SENT TO THE SNAP DISC.
4. INDICATOR LIGHTS WHEN SNAP DISC ENERGIZES THE HEATER
5. SNAP DISC SHOULD BE MOUNTED TOWARD THE MIDDLE OF THE COMPARTMENT AND HALF WAY UP.
6. PADS MUST BE FUSED INDIVIDUALLY AT A MAXIMUM FUSE SIZE OF 15AMPS

THE MONACO COACH CORP. AND ALL OF ITS SUBSIDIARIES CLAIMS PROPRIETARY RIGHTS IN THE MATERIAL HEREON. NEITHER THIS DRAWING NOR ANY REPRODUCTION THEREOF MAY BE USED TO MANUFACTURE ANYTHING WITHOUT PERMISSION IN WRITING FROM MONACO COACH CORP. OR ANY OF ITS SUBSIDIARIES TO THE USER SPECIFICALLY REFERRING TO THIS DRAWING.

DRAWN BY: R. BUCHERT
DATE: 4/6/05
CHECKED BY:

UNLESS SPECIFIED DIMENSIONS ARE IN INCHES
.XX ` .06 .XXX ` .030
ANGLES (PLUS OR MINUS) 0 ~30'

MONACO COACH CORP
HOLIDAY RAMBLER
DO NOT SCALE DRAWING

TITLE: DIAGRAM, COLD WTHR PKG
SERIES: ALL MOTORIZED
DWG.# 38060829
SHEET 1 OF 1
REV: 0