DWG.#	REV:
38051619	0

REV.	UNIT	DESCRIPTION OF CHANGE	BY	DATE
--	-	--------	---	--/--/--

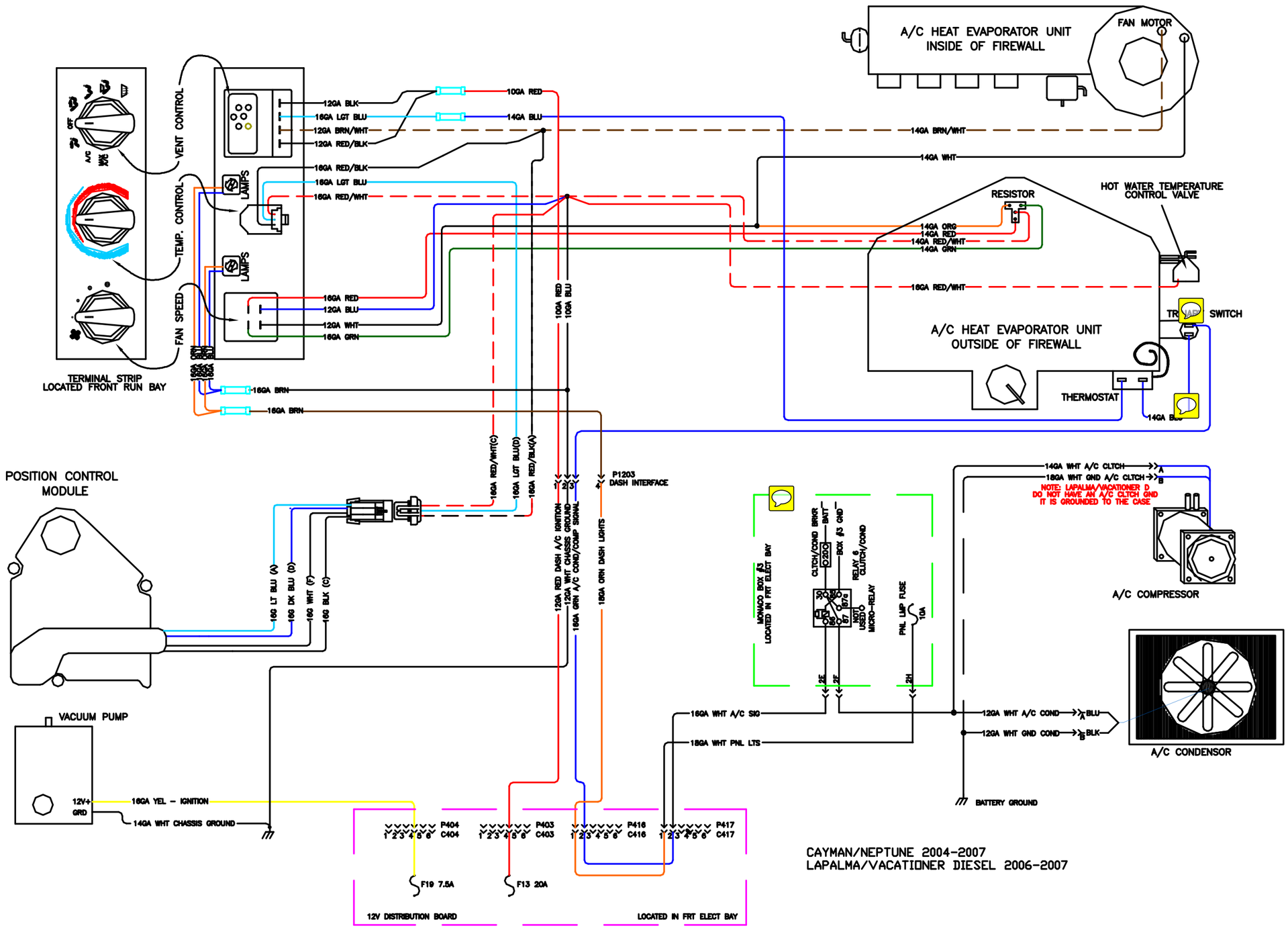

THE MONACO COACH CORP. AND ALL OF ITS SUBSIDIARIES CLAIMS PROPRIETARY RIGHTS IN THE MATERIAL HEREON. NEITHER THIS DRAWING NOR ANY REPRODUCTION THEREOF MAY BE USED TO MANUFACTURE ANYTHING WITHOUT PERMISSION IN WRITING FROM MONACO COACH CORP. OR ANY OF ITS SUBSIDIARIES TO THE USER SPECIFICALLY REFERRING TO THIS DRAWING.

DRAWN BY: R.BUCHERT
DATE: 8/24/06
CHECKED BY:

UNLESS SPECIFIED
DIMENSIONS ARE IN INCHES
.XX ±.06 .XXX ±.030
ANGLES (PLUS OR MINUS) 0 ±30'

MONACO COACH CORP
HOLIDAY RAMBLER
DO NOT SCALE DRAWING

TITLE: DIAGRAM, DASH A/C
SERIES: SEE USAGE
DWG.# 38051619
SHEET 1 OF 1
REV: 0