SECTION 10

PAGE #	DRAWING	DESCRIPTION
	777...	
1-7	02-19100	Chassis Electrical - Chevrolet L29
8-15	02-19200	Chassis Electrical - Ford
16-17	02-20000	Chassis Slide Out Electrical
18-20	19-00005	30E Interior 12V & 120V Electrical
21	18-00005	30E Ceiling Electrical
22-23	19-95905	30E Harness Routing Diagram
24-26	19-00007	32G Interior 12V & 120V Electrical
27	18-00007	32G Ceiling Electrical
28-29	19-95907	32G Harness Routing Diagram
30-32	19-00010	34J Interior 12V & 120V Electrical
33	18-00010	34J Ceiling Electrical
34-35	19-95910	34J Harness Routing Diagram
36-38	19-00016	34P Interior 12V & 120V Electrical
39	18-00016	34P Ceiling Electrical
40-41	19-95916	34P Harness Routing Diagram
42-44	19-00019	36S Interior 12V & 120V Electrical
45	18-00019	36S Ceiling Electrical
46-47	19-95919	36S Harness Routing Diagram
48-50	19-00021	35U Interior 12V & 120V Electrical
51	18-00021	35U Ceiling Electrical
52-53	19-95921	35U Harness Routing Diagram
54-57	19-00500	Electrical Panel Board Basic
58-59	19-09000	TV/VCR Wiring
60	19-90950	Typical Electrical Symbols
61-66	19-90951	Junction Box Wiring Information
67-70	19-09053	Typical 120V & 12V Wiring
71	19-90956	Water Pump Wiring Information
72-77	19-90965	Telephone Jack Routing Information
78	19-90966	Porch & Floor Light Wiring
79-80	19-90970	Range Hood/Monitor Panel Wiring
81-82	19-90975	Slide Out Control Panel Location Information
83	19-90976	Slide Out Wire Routing Diagram
84	19-90980	Rear Vision Camera Cable Information
85	19-90967	TV Cable Tag Information
86	19-90968	120V Tap & Splice Connector Information
87-88	19-90972	Front & Rear Harness Location

777 Cont...

89-91	21-17100	Head Lamp/Signal Lamp Wiring - Chevrolet
92-94	21-17200	Head Lamp/Signal Lamp Wiring - Ford
95-97	19-04800	Slide Out J-Box Details
98	26-90955	Tail & Clearance Light Install Information
99	26-90956	Porch Light & Grab Bar Install Information
100	26-90973	Rearview Mirrors Installation
101	28-10000	Radio/Tape AM/FM/MX
102	43-26951	Generator 12V Routing Information
103	44-00554	C.S.A. Daytime Running Lights
104-107	49-06000	Rear Vision Camera

D.C. RELEASE	DESCRIPTION	DATE	BY	SCALE: 6" = 1'-0"	USED ON:	FLEETWOOD RECREATIONAL VEHICLE GROUP	PAGE NO. 777-02-19100
				DRAWN: A.BAUTISTA DATE: 01-19-96			SHEET 1 OF 7
97-00		04-23-96	CC	PROJECT: 97777303		TITLE: CHASSIS ELECTRICAL - CHEVY L29	
97-03		06-27-96	BS	PLOT: 06/27/96 08:42:41 01spinub	AUX. INFO.		

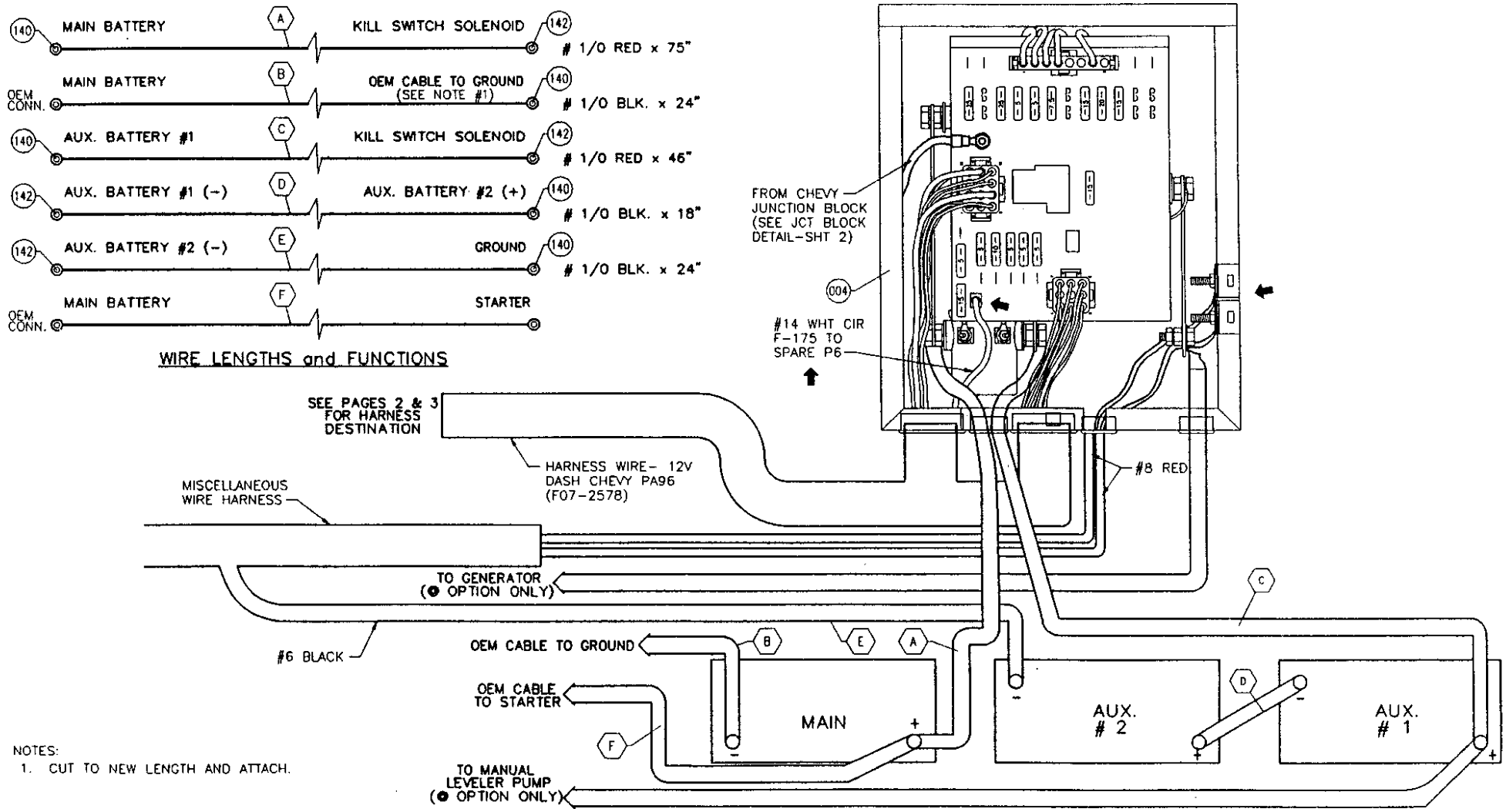

NOTES:
1. CUT TO NEW LENGTH AND ATTACH.

D.C. RELEASE	DESCRIPTION	DATE	BY	SCALE: 6" = 1'-0"	USED ON:	FLEETWOOD RECREATIONAL VEHICLE GROUP	PAGE NO: 777-02-19100
				DRAWN: A.BAUTISTA / DATE: 01-19-96			SHEET 2 OF 7
				PROJECT: 97777300		TITLE: CHASSIS ELECTRICAL - CHEVY L29	
97-00		03-19-96	DM	PLOT: 03/19/96 18:04:39 01milled	AUX INFO.		

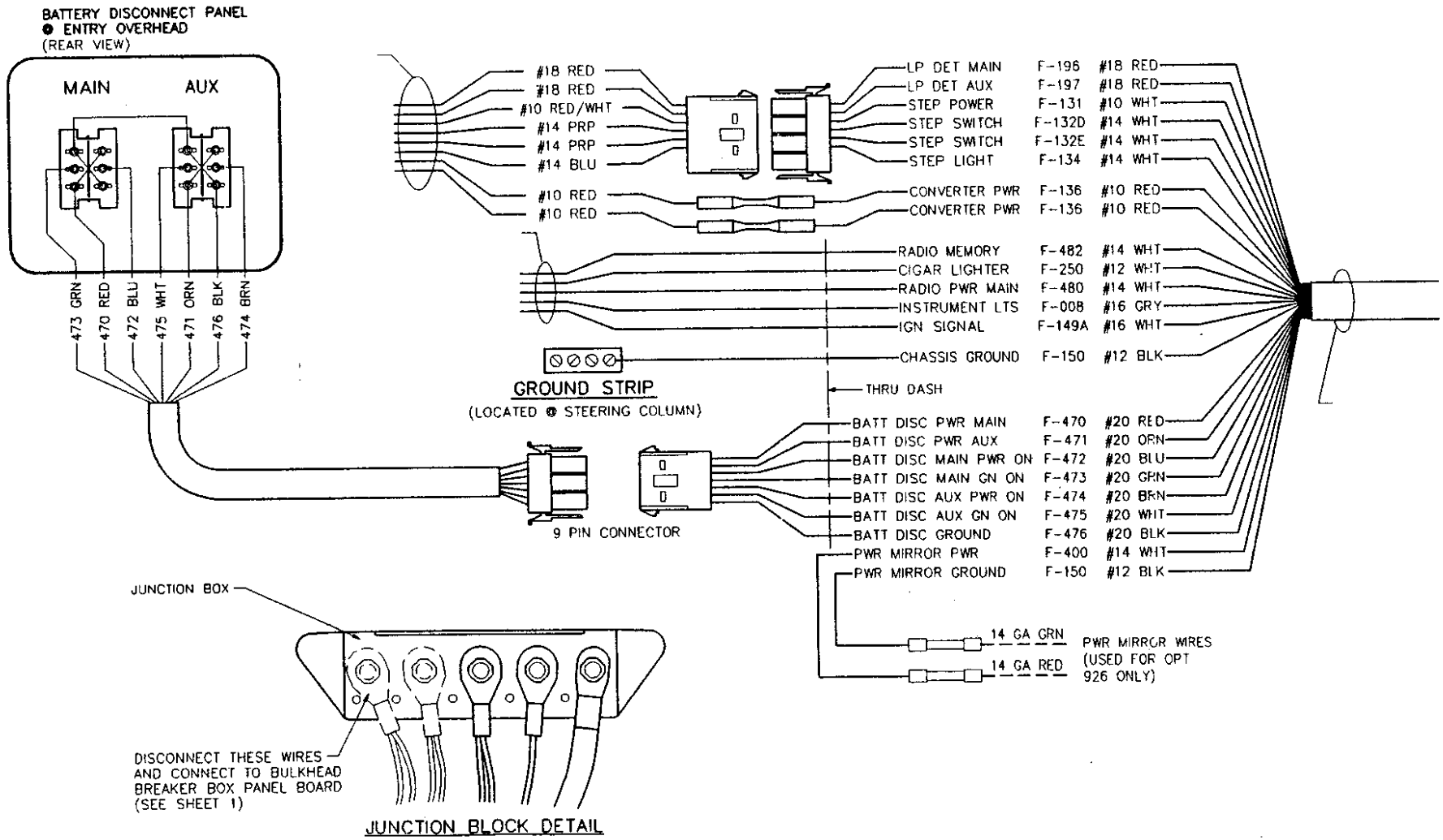

D.C. RELEASE	DESCRIPTION	DATE	BY	SCALE: 12" = 1'-0"	USED ON:	FLEETWOOD RECREATIONAL VEHICLE GROUP	PAGE NO. 777-02-19100
				DRAWN: A.BAUTISTA DATE: 01-19-96			SHEET 3 OF 7
97-00		03-19-96	DM	PROJECT: 97777303		TITLE: CHASSIS ELECTRICAL - CHEVY L29	
97-03		06-10-96	RT	PLOT: 06/10/96 14:32:42 Oltorrer	AUX. INFO.		

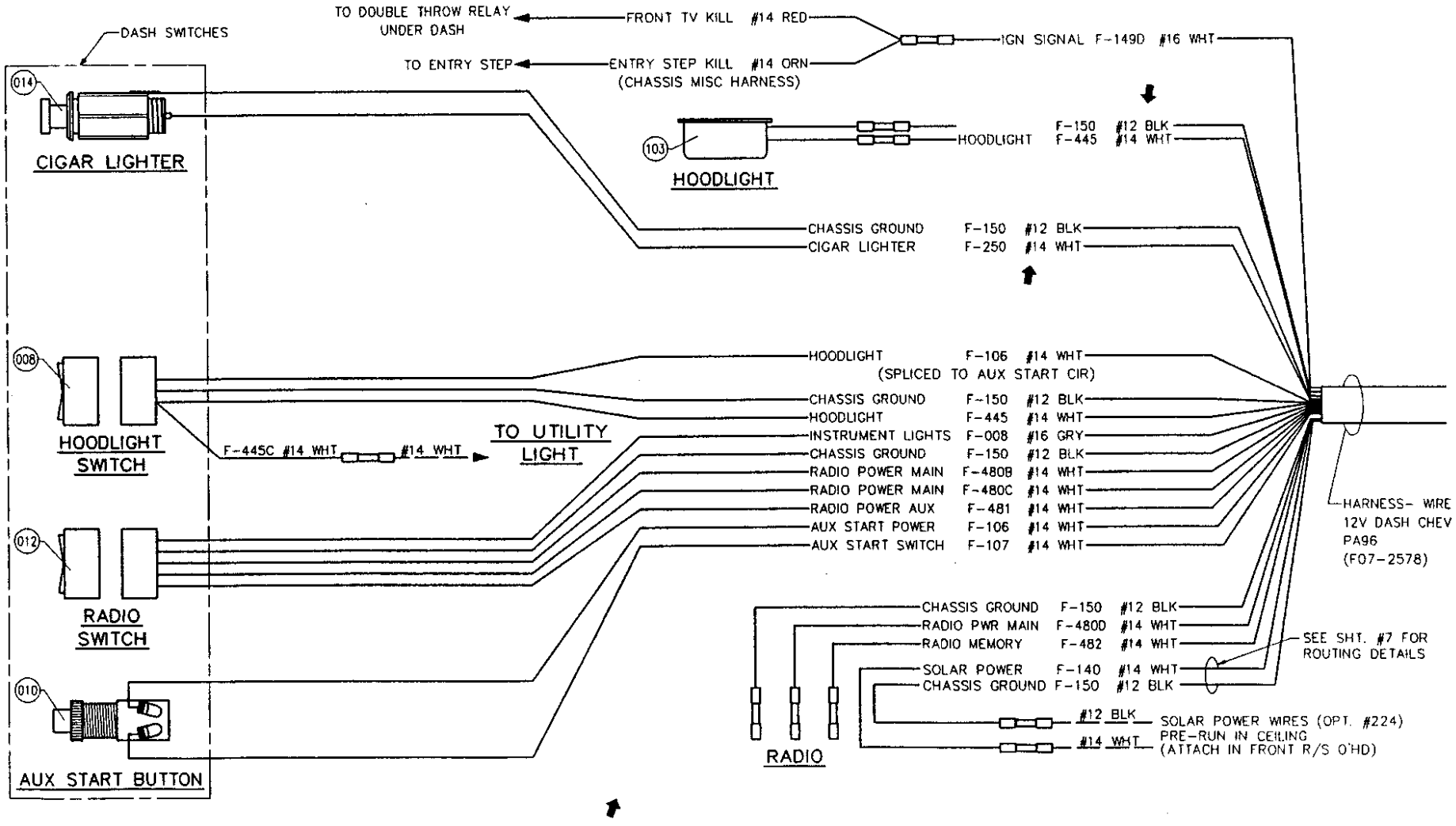

D.C. RELEASE	DESCRIPTION	DATE	BY	SCALE: 12" = 1'-0"	USED ON:	FLEETWOOD RECREATIONAL VEHICLE GROUP	PAGE NO. 777-02-19100
				DRAWN: A.BAUTISTA / DATE: 01-22-96			SHEET 4 OF 7
				PROJECT: 97777300		TITLE: CHASSIS ELECTRICAL - CHEVY L29	
97-00		03-19-96	DM	PLOT: 03/19/96 18:06:03 01milled	AUX. INFO		

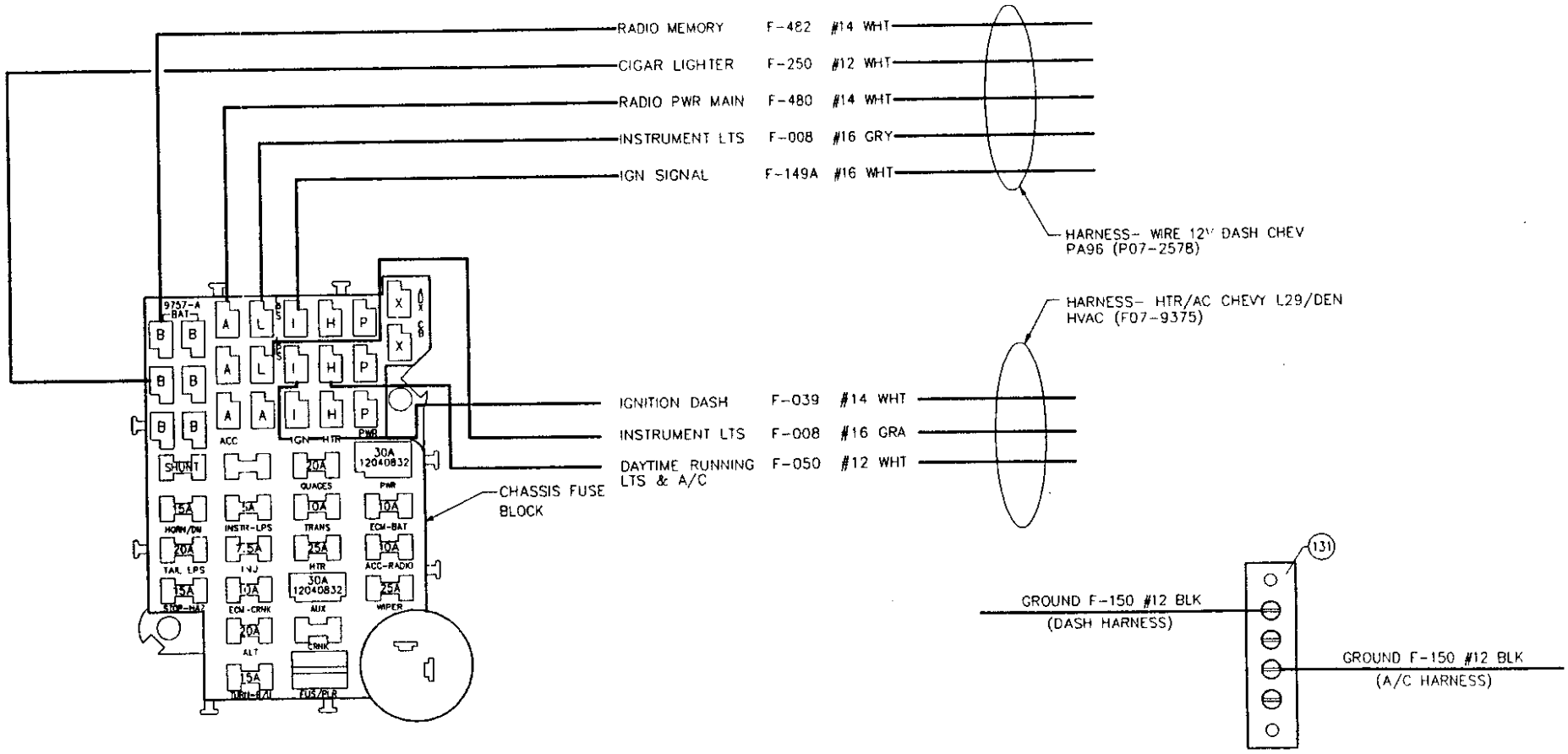

DASH GROUND BUSS DETAIL
SECURE TO STEERING COLUMN SUPPORT

D.C. RELEASE	DESCRIPTION	DATE	BY	SCALE: 1" = 1'-0"	USED ON:
97-00		03-19-96	DM	DRAWN: A.BAUTISTA / DATE: 01-22-96	
				PROJECT: 97777303	
97-03	ECL #050	06-21-96	BS	PLOT: 06/21/96 14:00:49 01spinub	AUX. INFO.

FLEETWOOD RECREATIONAL VEHICLE GROUP

PAGE NO. 777-02-19100

SHEET 5 OF 7

TITLE: CHASSIS ELECTRICAL - CHEVY L29

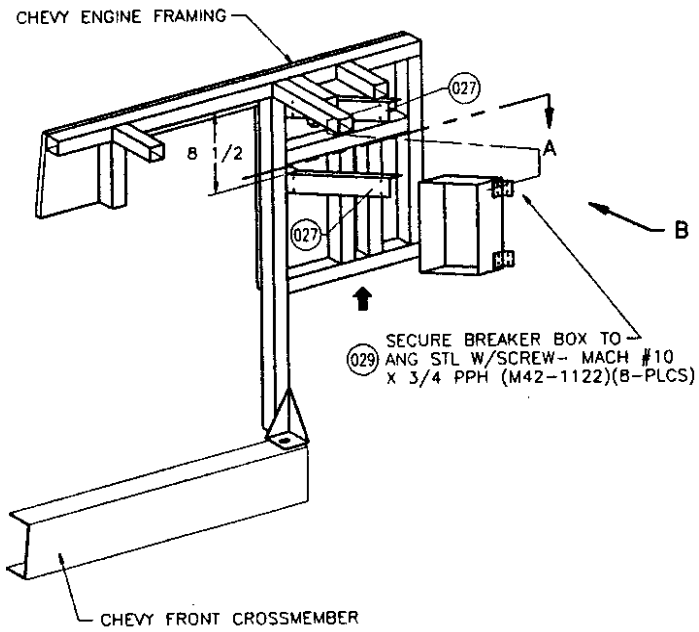

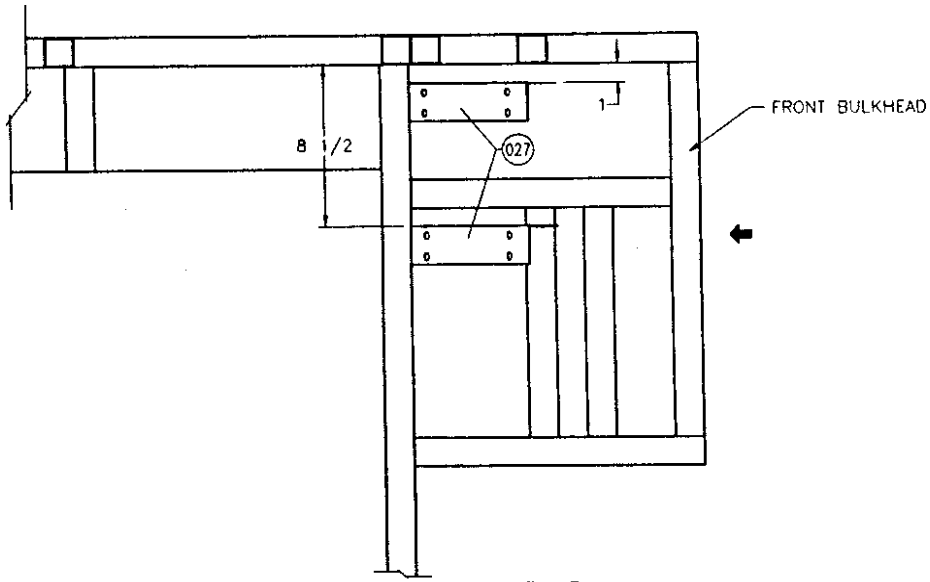

VIEW B
SCALE: 2" = 1'-0"

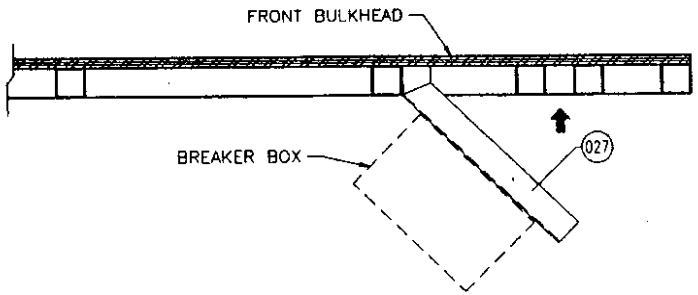

SECTION A
SCALE: 2" = 1'-0"

D.C. RELEASE	DESCRIPTION	DATE	BY	SCALE: 2 1/2" = 1'-0"	USED ON:	FLEETWOOD RECREATIONAL VEHICLE GROUP	PAGE NO. 777-02-19100
				DRAWN: A.BAUTISTA / DATE: 01-22-96			SHEET 6 OF 7
				PROJECT: 97777300		TITLE: CHASSIS ELECTRICAL - CHEVY L29	
97-00		03-19-96	DM	PLOT: 03/19/96 18:07:15 01milled	AUX INFO.		

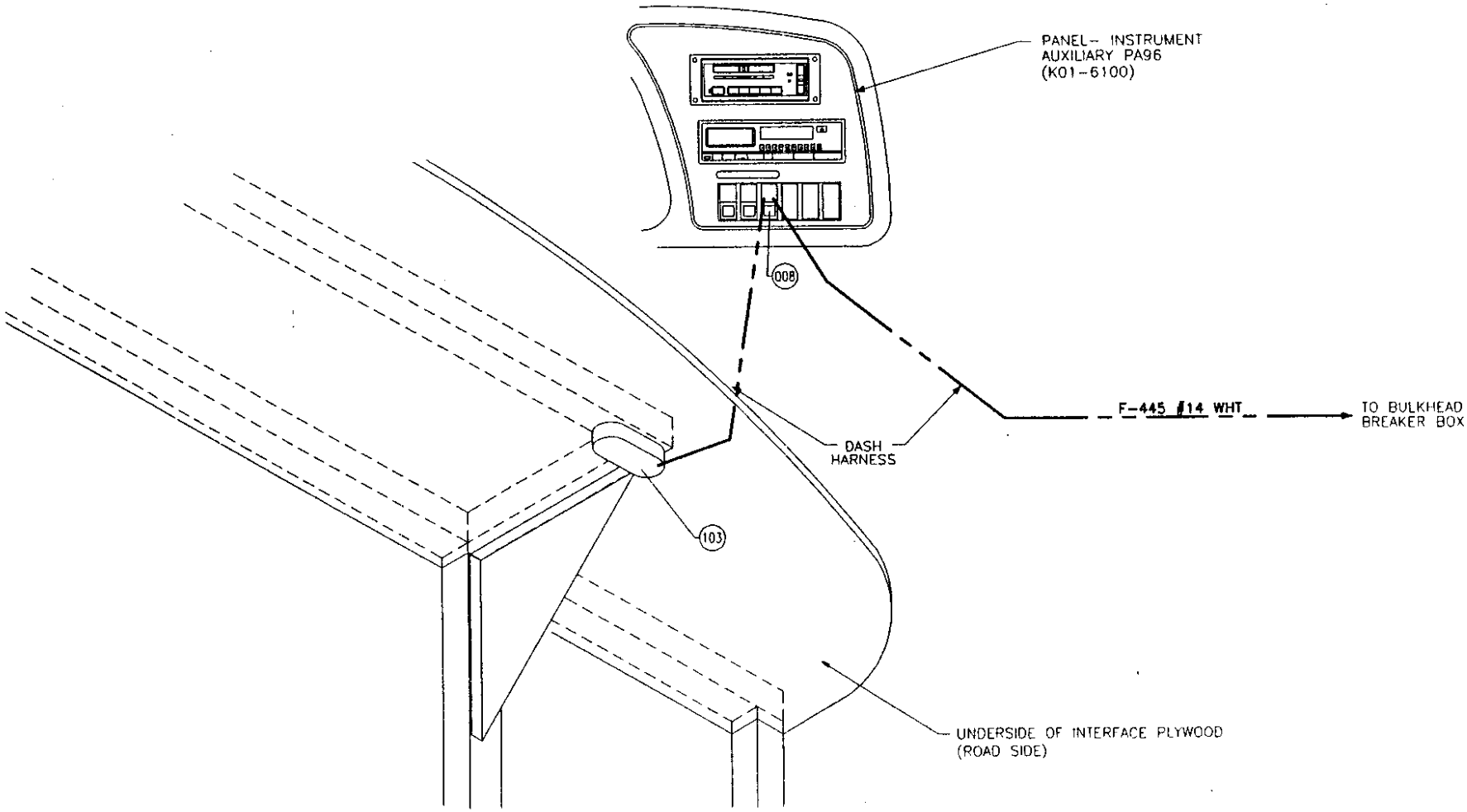

D.C. RELEASE	DESCRIPTION	DATE	BY	SCALE: 1" = 1'-0"	USED ON:	FLEETWOOD RECREATIONAL VEHICLE GROUP	PAGE NO. 777-02-19100
				DRAWN: A.BAUTISTA DATE: 01-22-96			SHEET 7 OF 7
				PROJECT: 97777300		TITLE: CHASSIS ELECTRICAL - CHEVY L29	
97-00		03-19-96	DM	PLOT: 03/19/96 18:07:39 01milled	AUX. INFO		

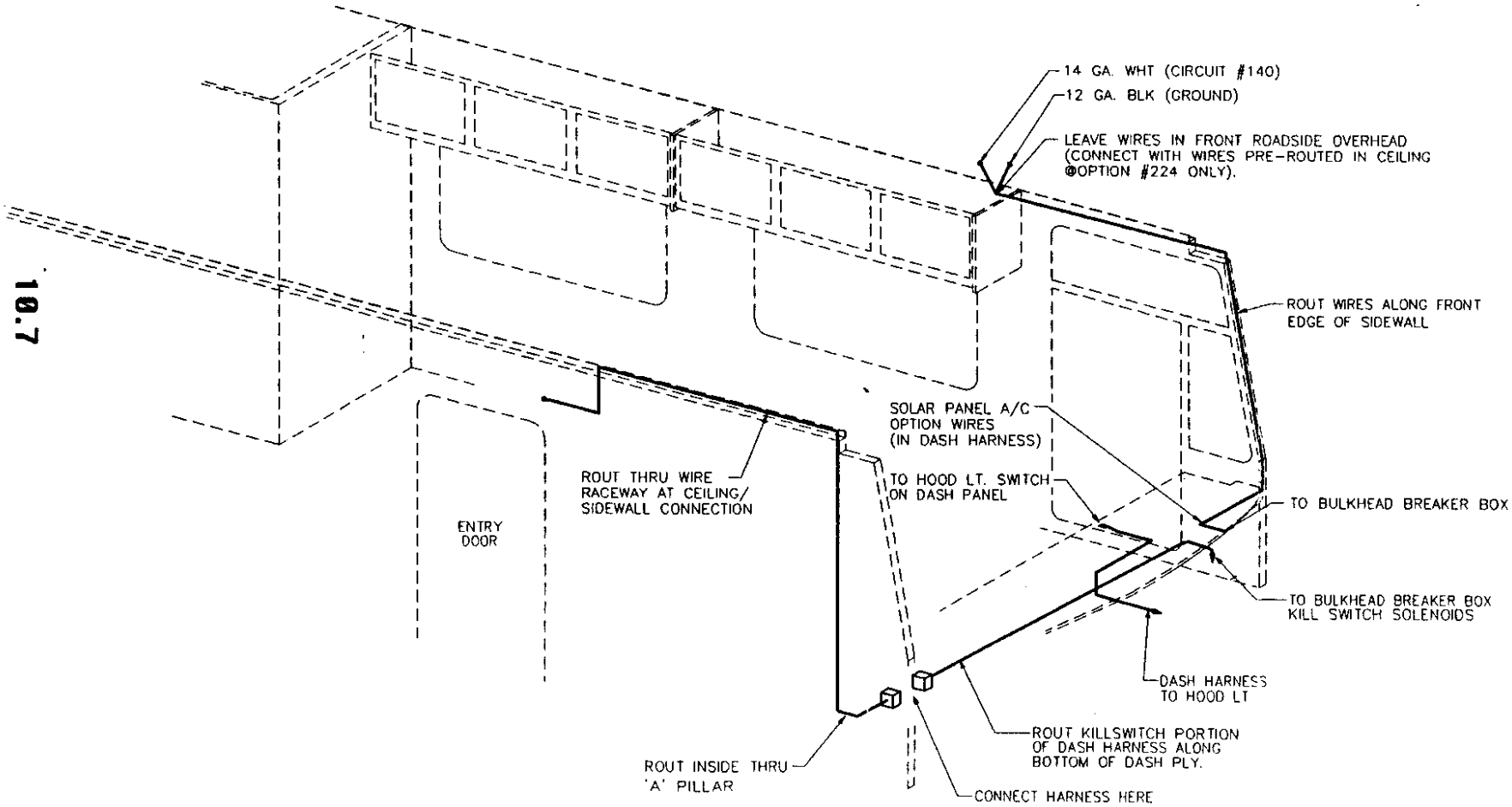

D.C. RELEASE	DESCRIPTION	DATE	BY	SCALE 6" = 1'-0"	USED ON
97-00		04-02-96	DM	DRAWN J CORTEZ / DATE 01-31-95	
97-01		05-15-96	LP	PROJECT 97777303	
97-03		06-20-96	BS	PLOT 06/20/96 14:02:40 01spinub	AUX. INFO.

FLEETWOOD RECREATIONAL VEHICLE GROUP — PAGE NO. 777-02-19200 — SHEET 1 OF 8

TITLE: CHASSIS ELECTRICAL – FORD

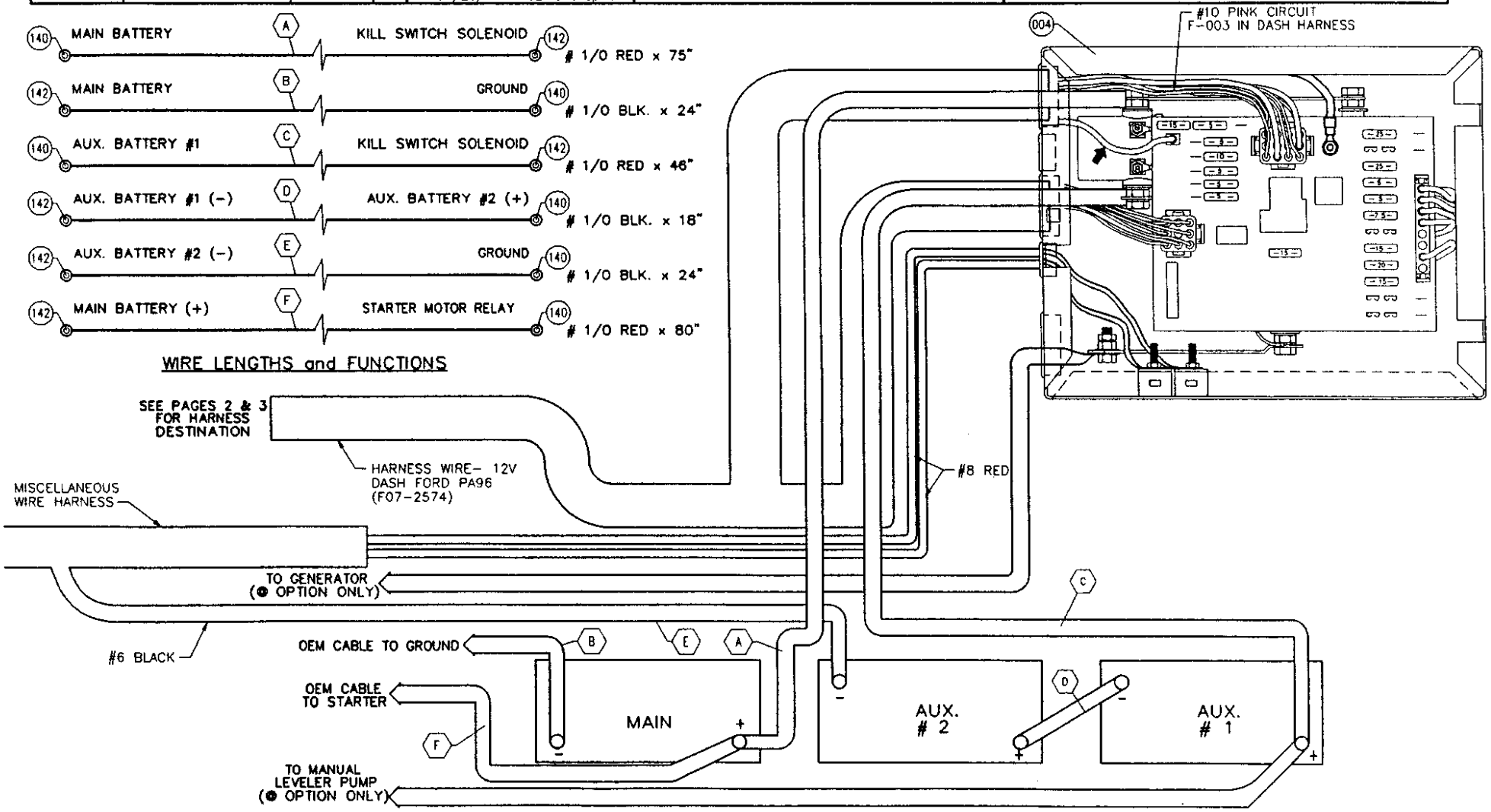

D.C. RELEASE	DESCRIPTION	DATE	BY	SCALE: 12" = 1'-0"	USED ON:	FLEETWOOD RECREATIONAL VEHICLE GROUP	PAGE NO. 777-02-19200
				DRAWN: J.CORTEZ DATE: 01-31-95			SHEET 2 OF 8
				PROJECT: 97777300		TITLE: CHASSIS ELECTRICAL - FORD	
97-00		04-03-96	RT	PLOT: 04/03/96 08:11:15 Oltorrer	AUX. INFO.		

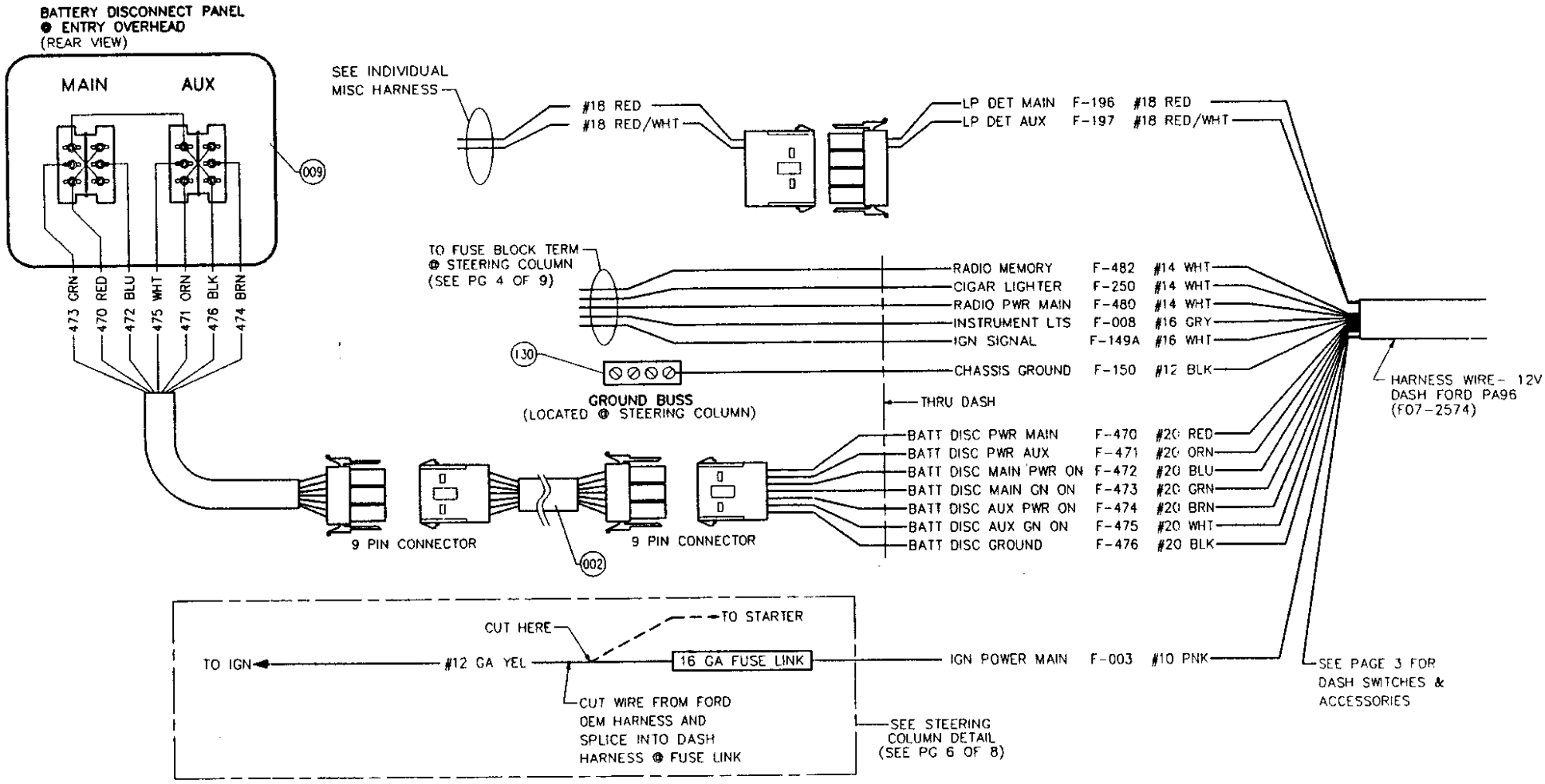

D.C. RELEASE	DESCRIPTION	DATE	BY	SCALE: 12" = 1'-0"	USED ON:
				DRAWN: J.CORTEZ / DATE: 01-31-95	
97-00		04-02-96	DM	PROJECT: 97777303	
97-03		06-10-96	RT	PLOT: 06/10/96 13:55:43 01torrer	AUX. INFO.

FLEETWOOD RECREATIONAL VEHICLE GROUP

PAGE NO. 777-02-19200

SHEET 3 OF 8

TITLE: CHASSIS ELECTRICAL - FORD

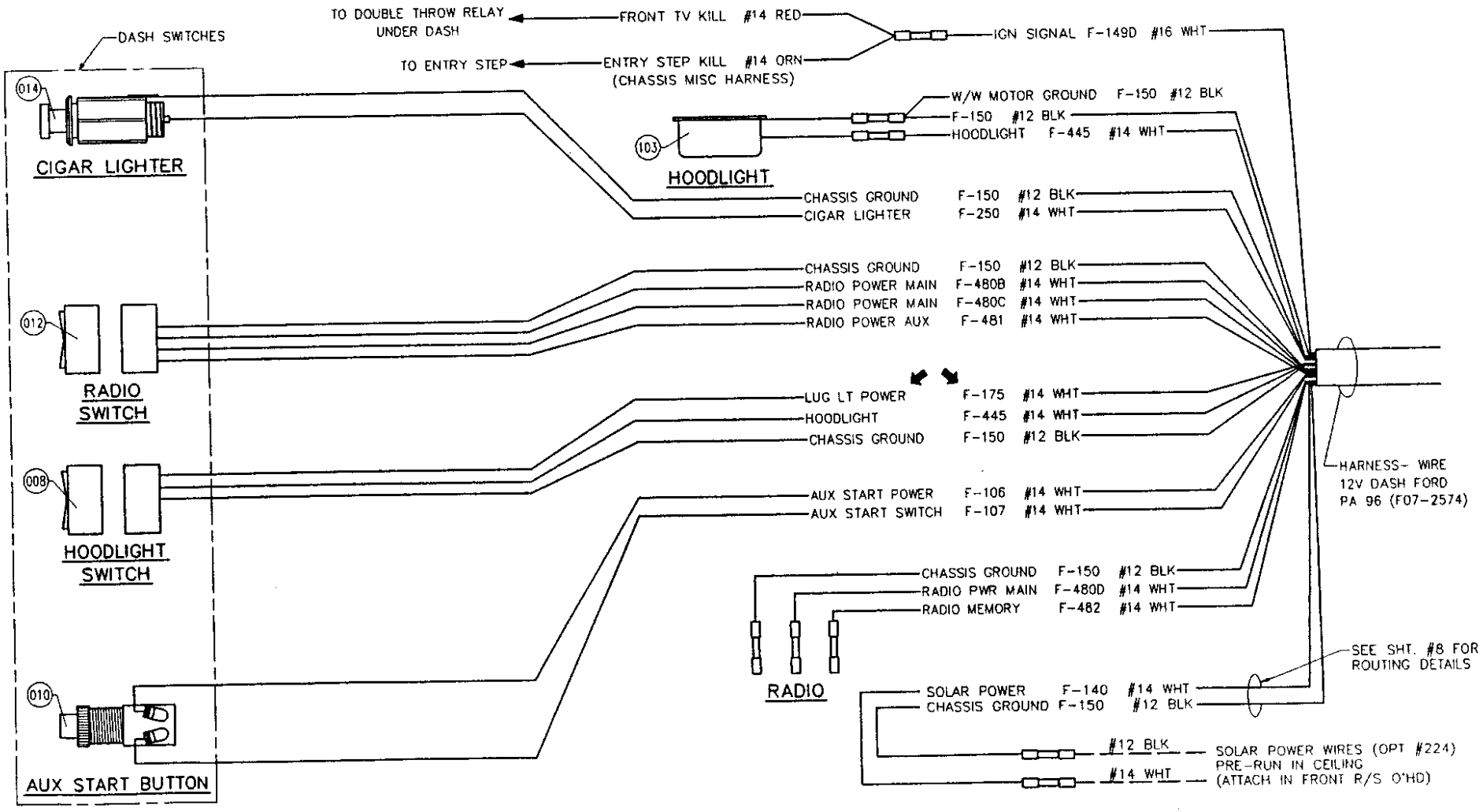

D.C. RELEASE	DESCRIPTION	DATE	BY	SCALE 12" = 1'-0"	USED ON
				DRAWN J.CORTEZ / DATE 01-31-95	
				PROJECT 97777300	
97-00		04-02-96	DM	PLOT: 04/02/96 16:57:47 01milled	AUX INFO

FLEETWOOD RECREATIONAL VEHICLE GROUP

PAGE NO 777-02-19200

SHEET 4 OF 8

TITLE: CHASSIS ELECTRICAL – FORD

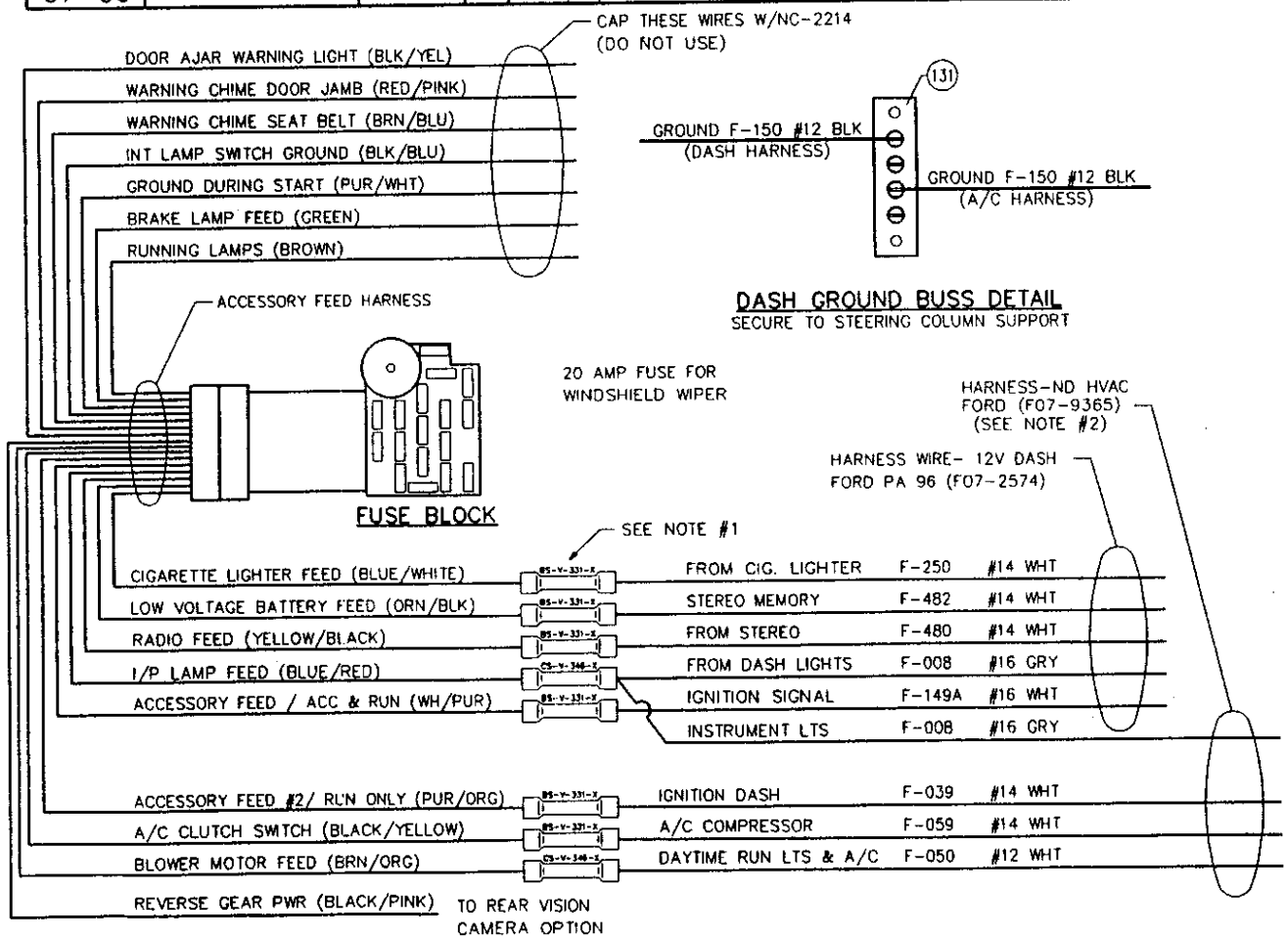

DASH GROUND BUSS DETAIL

SECURE TO STEERING COLUMN SUPPORT

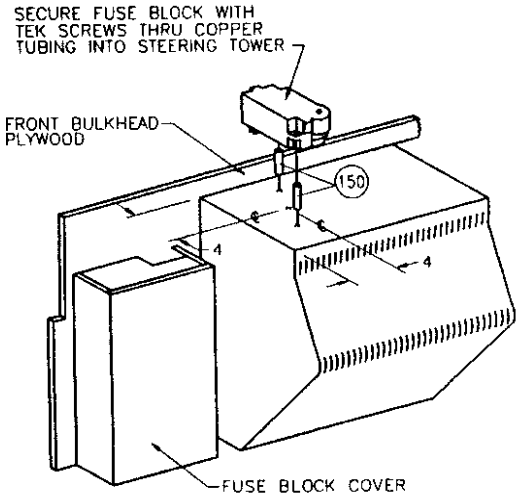

FUSE BLOCK LOCATION

NOTES:

1. BUTT CONNECT THESE WIRES TOGETHER.
2. REMOVE SPADE CONNECTORS FROM A/C HARNESS AND BUTT CONNECT WIRES WITH FORD ACCESSORY & JUNCTION BLOCK WIRE HARNESS.

D.C. RELEASE	DESCRIPTION	DATE	BY	SCALE 1 1/2" = 1'-0"	USED ON	FLEETWOOD	PAGE NO. 777-02-19200
				DRAWN J CORTEZ / DATE 01-31-95		RECREATIONAL VEHICLE GROUP	SHEET 5 OF 8
97-00		04-02-96	DM	PROJECT 97777301		TITLE CHASSIS ELECTRICAL - FORD	
97-01	REVISED & REDRAWN	05-13-96	LP	PLOT 05/13/96 14:39:04 01pirkll	AUX. INFO		

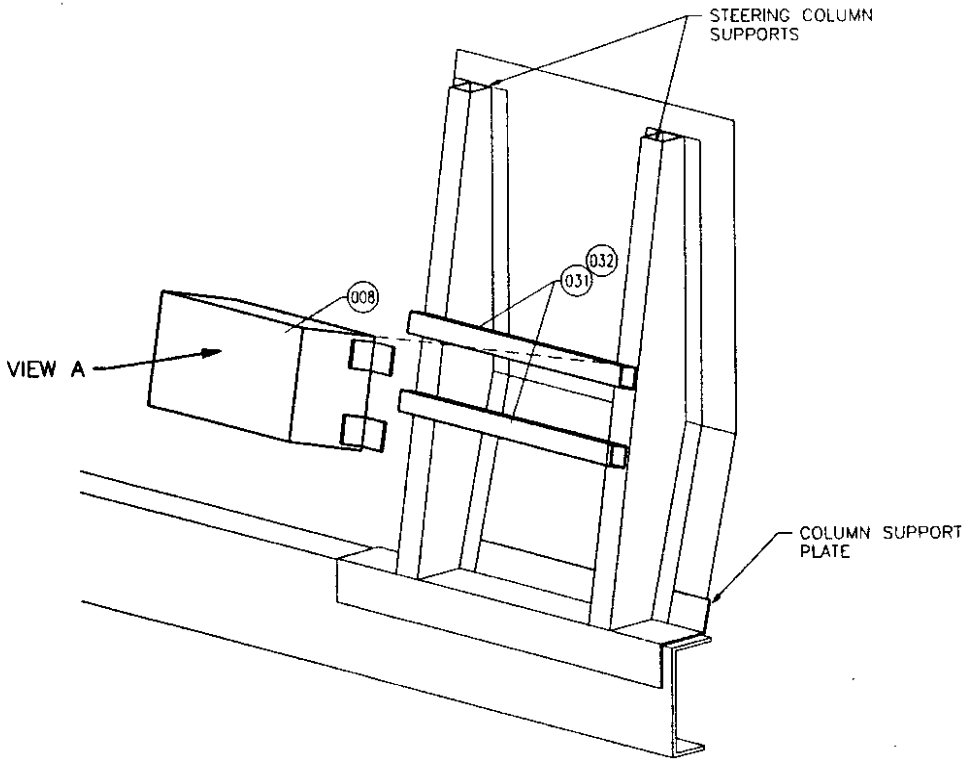

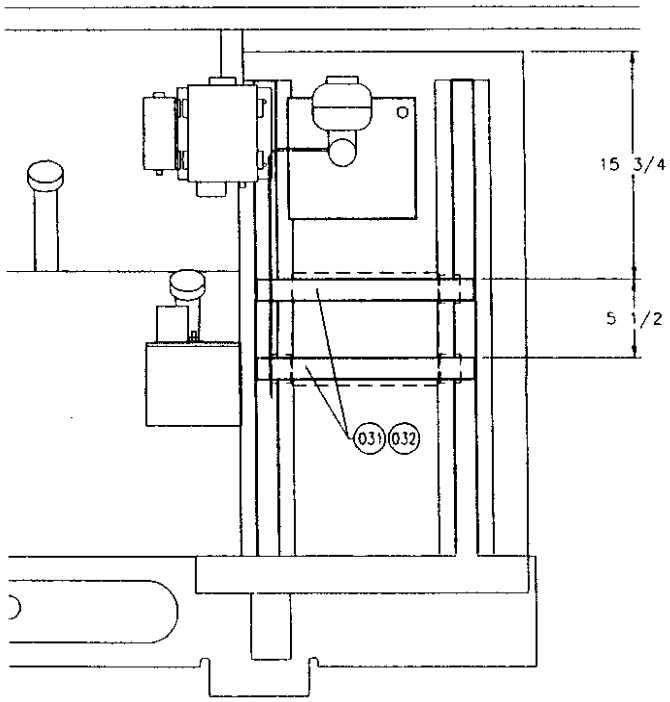

VIEW A
SCALE: 1 1/2" = 1'-0"

D.C. RELEASE	DESCRIPTION	DATE	BY	SCALE: 4" = 1'-0"	USED ON:	FLEETWOOD RECREATIONAL VEHICLE GROUP	PAGE NO. 777-02-19200
				DRAWN: J.CORTEZ / DATE: 01-31-95			SHEET 6 OF 8
97-00		04-02-96	DM	PROJECT: 97777304		TITLE: CHASSIS ELECTRICAL - FORD	
97-04	REVISED & REDRAWN	07-24-96	RT	PLOT: 07/24/96 15:17:15 01torrer	AUX. INFO.		

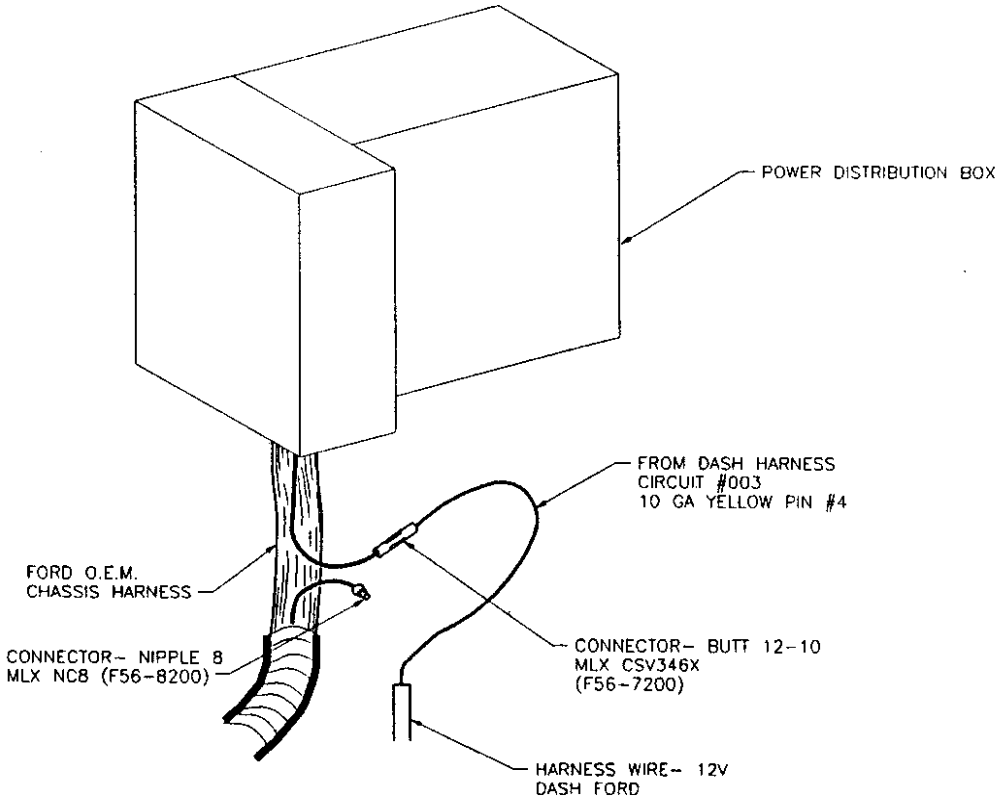

D.C. RELEASE	DESCRIPTION	DATE	BY	SCALE: 2 1/2" = 1'-0"	USED ON:	FLEETWOOD RECREATIONAL VEHICLE GROUP	PAGE NO. 777-02-19200
				DRAWN: J.CORTEZ DATE: 01-31-95			SHEET 7 OF 8
				PROJECT 97777300		TITLE: CHASIS ELECTRICAL - FORD	
97-00		04-03-96	RT	PLOT: 04/03/96 11:26:11 01torrer	AUX. INFO.		

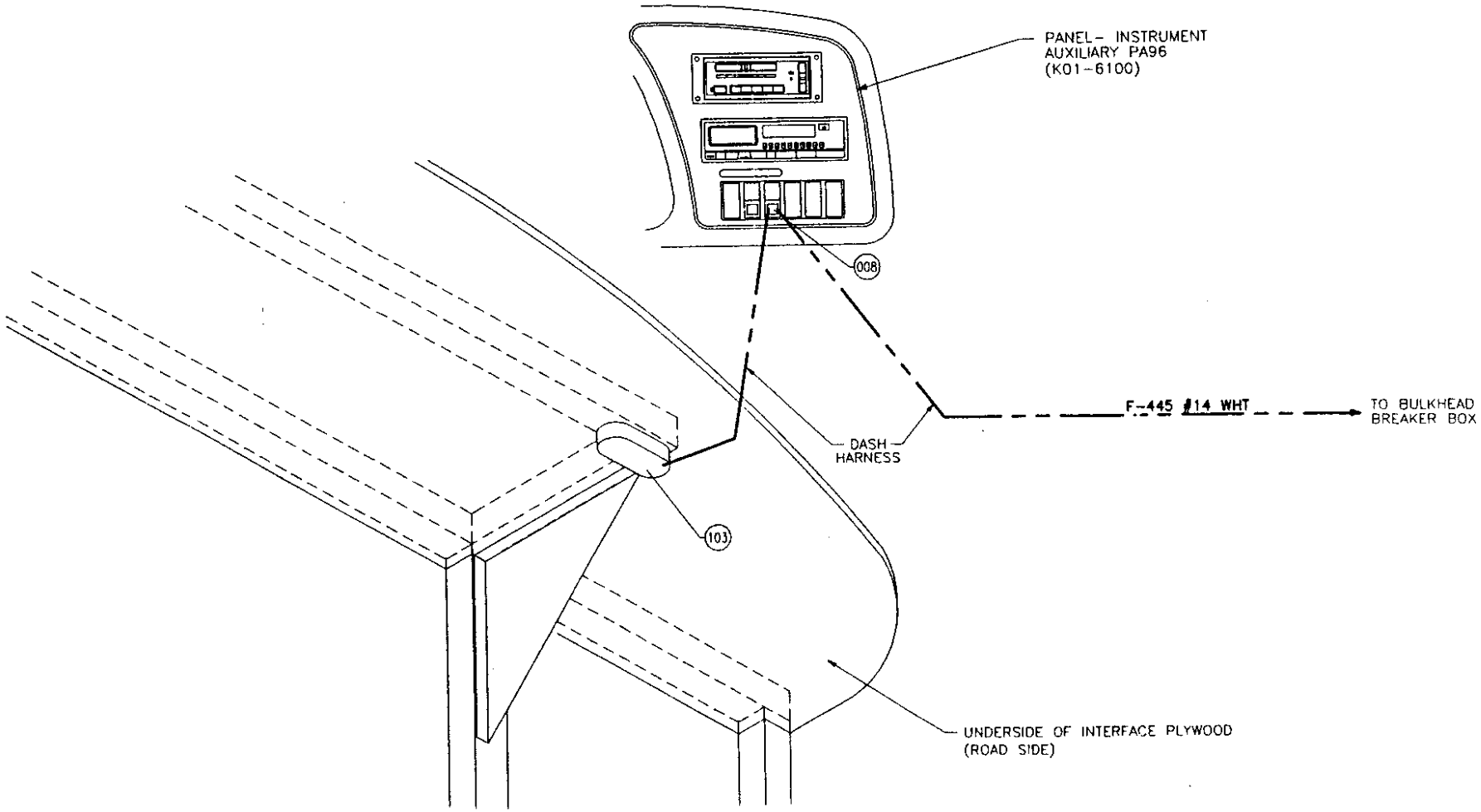

D.C. RELEASE	DESCRIPTION	DATE	BY	SCALE: 1/2" = 1'-0"	USED ON:	FLEETWOOD RECREATIONAL VEHICLE GROUP	PAGE NO. 777-02-19200
				DRAWN: J.CORTEZ / DATE: 01-31-95			SHEET 8 OF 8
				PROJECT: 97777300		TITLE: CHASSIS ELECTRICAL - FORD	
97-00		04-02-96	DM	PLOT: 04/02/96 16:59:20 01milled	AUX. INFO.		

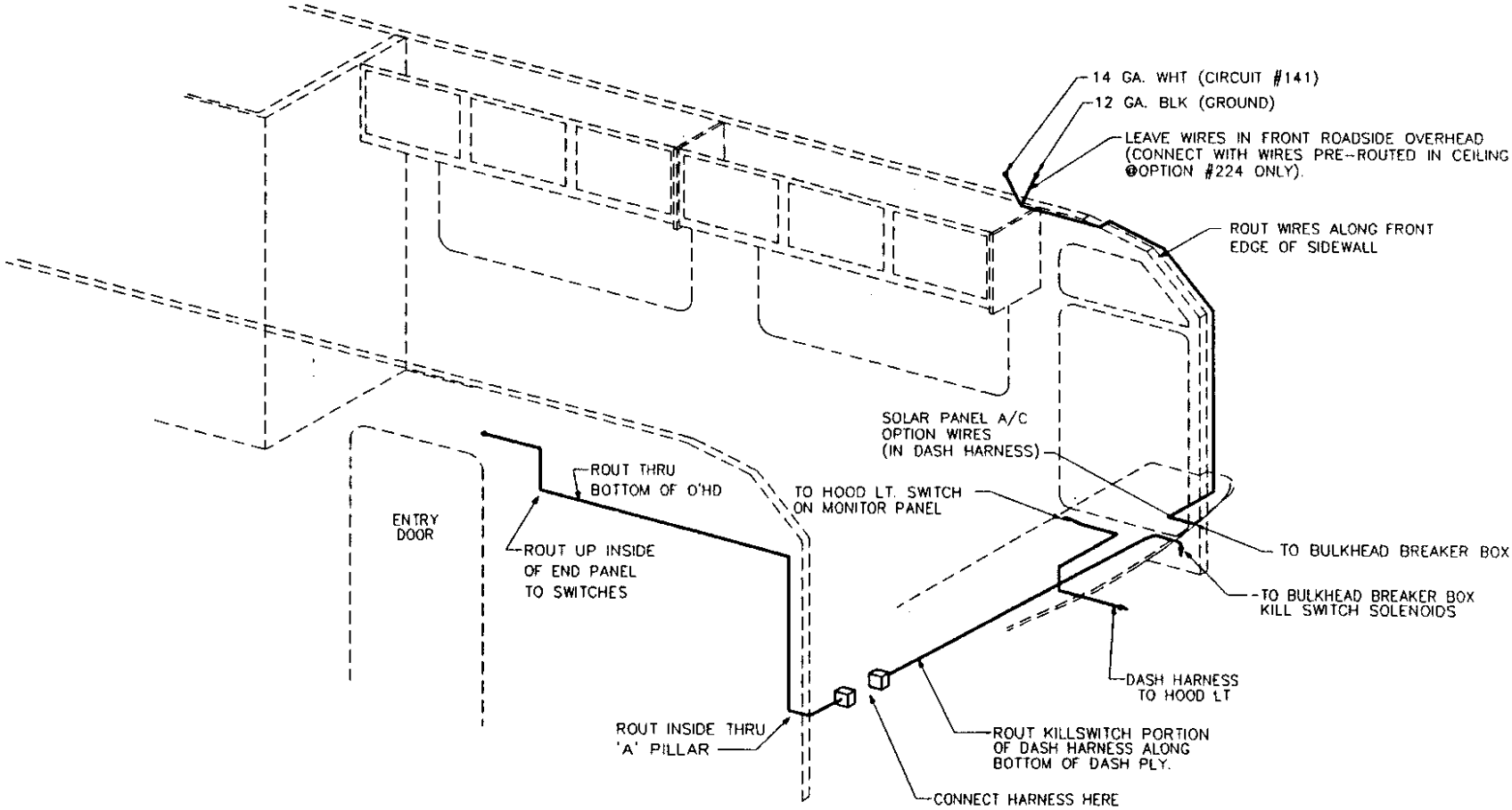

RELEASE	DESCRIPTION	DATE	BY	SCALE: 1 3/4" = 1'-0"	USED ON:
				DRAWN: R. GILLIAM / DATE: 11-16-94	
				PROJECT: 97777303	
7-03	REVISED & REDRAWN	06-27-96	BS	PLOT: 06/27/96 08:44:25 01spinub	AUX INFO.

FLEETWOOD RECREATIONAL VEHICLE GROUP

PAGE NO. 777-02-20000

SHEET 1 OF 2

TITLE: CHASSIS ELECTRICAL - SLIDEOUT

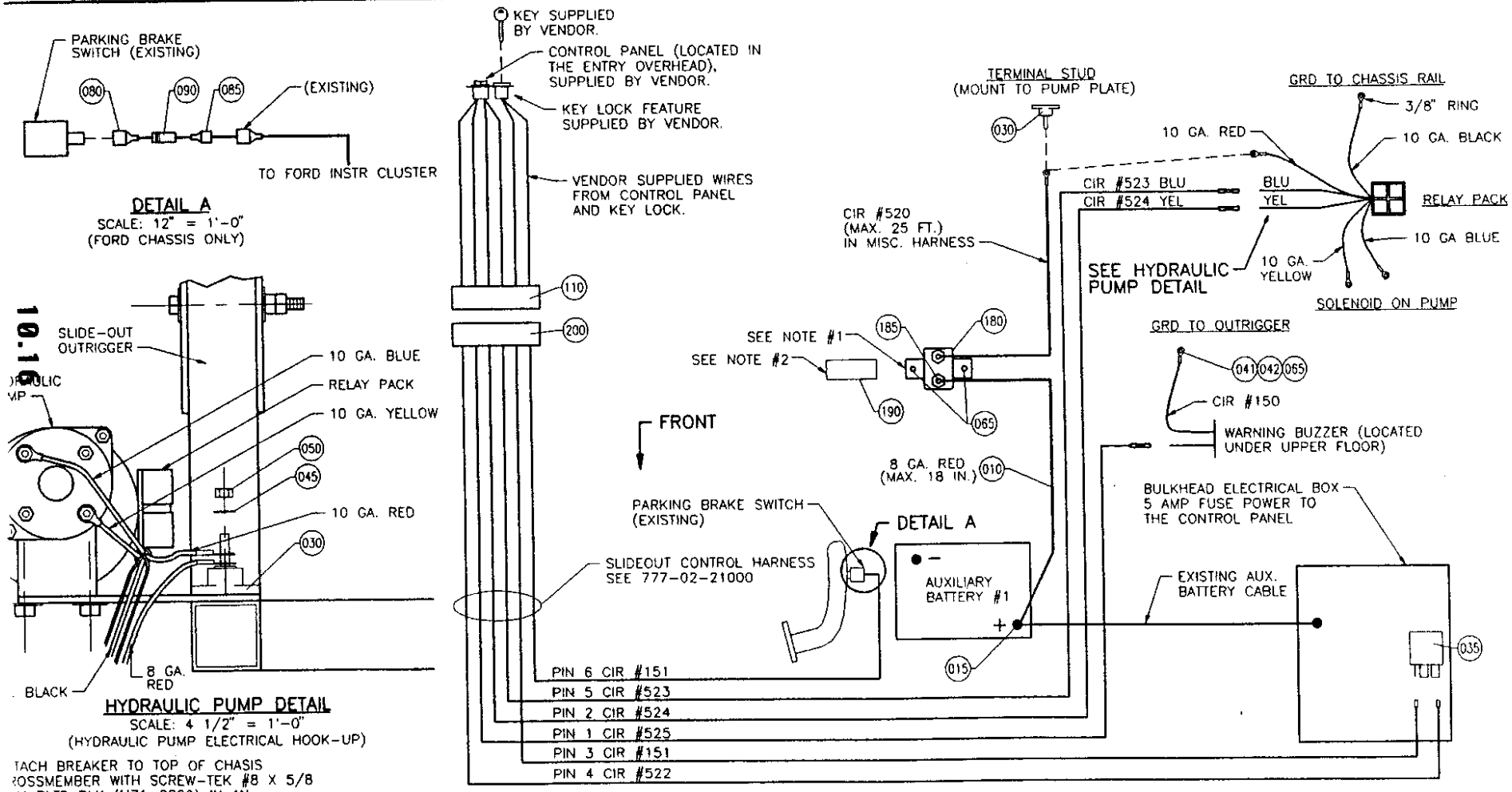

TACH BREAKER TO TOP OF CHASIS
ROSSMEMBER WITH SCREW-TEK #8 X 5/8
PH PLTD BLK (M71-0802) IN AN
CESSIBLE LOCATION.
ICATE TAG (W12-2175) NEXT TO BREAKER.

D.C. RELEASE	DESCRIPTION	DATE	BY	SCALE: 16" = 1'-0"	USED ON:	FLEETWOOD RECREATIONAL VEHICLE GROUP	PAGE NO. 777-02-20000
97-00		02-20-96	AF	DRAWN: J.CORTEZ / DATE: 12-14-95			SHEET 2 OF 2
97-02		06-04-96	LP	PROJECT: 97777303		TITLE: CHASSIS ELECTRICAL - SLIDEOUT	
97-03		06-19-96	BS	PLOT: 06/19/96 10:55:46 01spinub	AUX. INFO.		

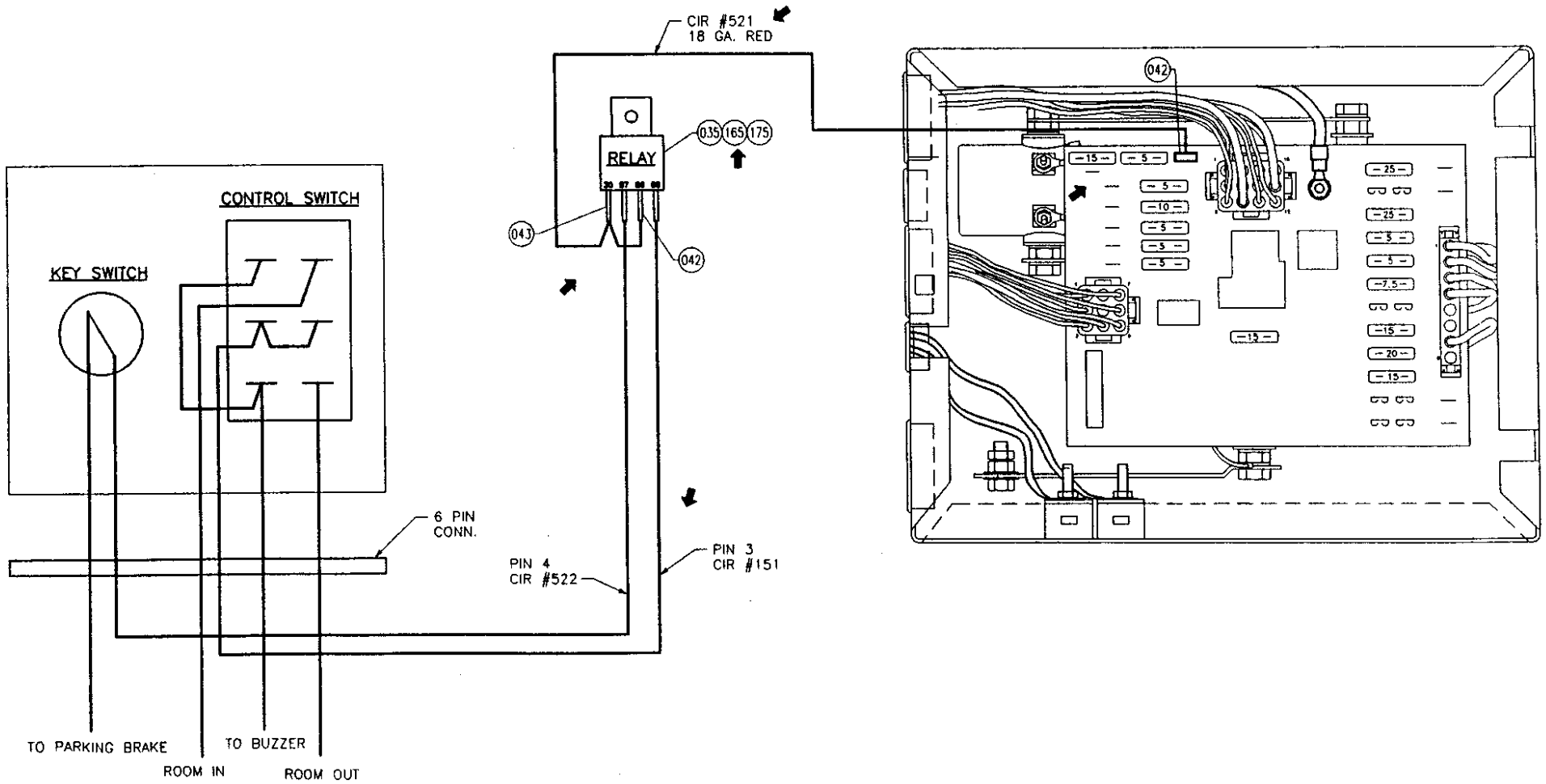

D.C. RELEASE	DESCRIPTION	DATE	BY	SCALE: 1/2" = 1'-0"	USED ON:	FLEETWOOD RECREATIONAL VEHICLE GROUP	PAGE NO 777-19-00005
				DRAWN: A BAUTISTA / DATE: 10-24-95			SHEET 1 OF 3
97-01		05-02-96	BS	PROJECT: 97777302		TITLE: ELECTRICAL - 30E	
97-02		06-04-96	AD	PLOT: 06/04/96 13:29:44 01deleoa	AUX. INFO	120V INTERIOR	

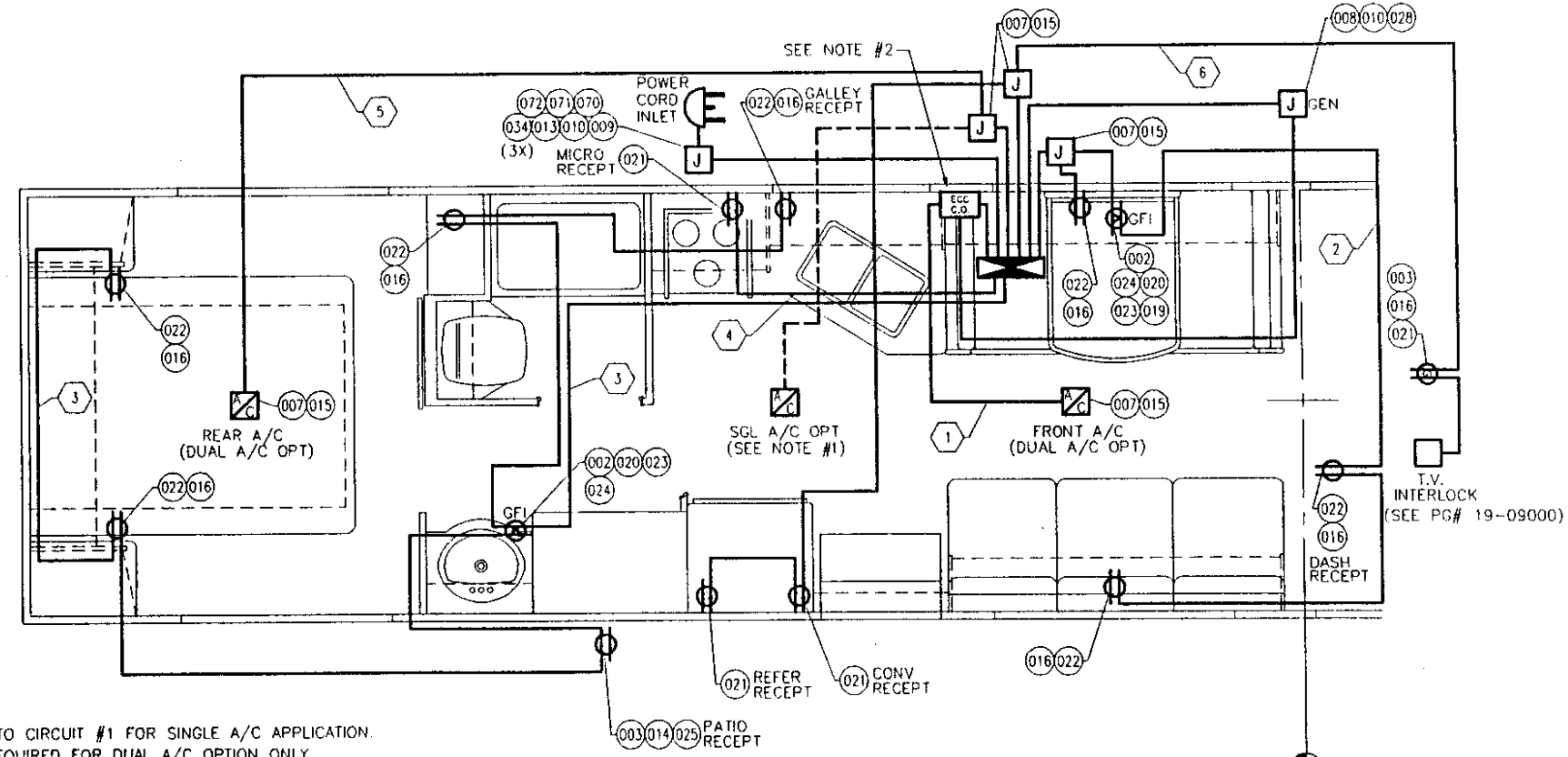

NOTES:
1. TAP INTO CIRCUIT #1 FOR SINGLE A/C APPLICATION.
2. ECC REQUIRED FOR DUAL A/C OPTION ONLY.

120 VOLT CIRCUITS

1	20 AMP	A/C ECC CHANGEOVER	12-2 W/GROUND	4	20 AMP	MICROWAVE	12-2 W/GROUND
2	20 AMP	GENERAL PURPOSE	12-2 W/GROUND	5	20 AMP	A/C	12-2 W/GROUND
3	15 AMP	GENERAL PURPOSE	14-2 W/GROUND	6	20 AMP	APPLIANCE	12-2 W/GROUND

D.C. RELEASE	DESCRIPTION	DATE	BY	SCALE: 1/2" = 1'-0"	USED ON:	FLEETWOOD RECREATIONAL VEHICLE GROUP	PAGE NO. 777-19-00005
				DRAWN: A.BAUTISTA DATE: 10-24-95			SHEET 2 OF 3
97-01		05-14-96	BS	PROJECT: 97777303		TITLE: ELECTRICAL - 30E	
97-03		06-14-96	RT	PLOT: 06/14/96 09:09:02 Ottorrer	AUX INFO:	12V INTERIOR	

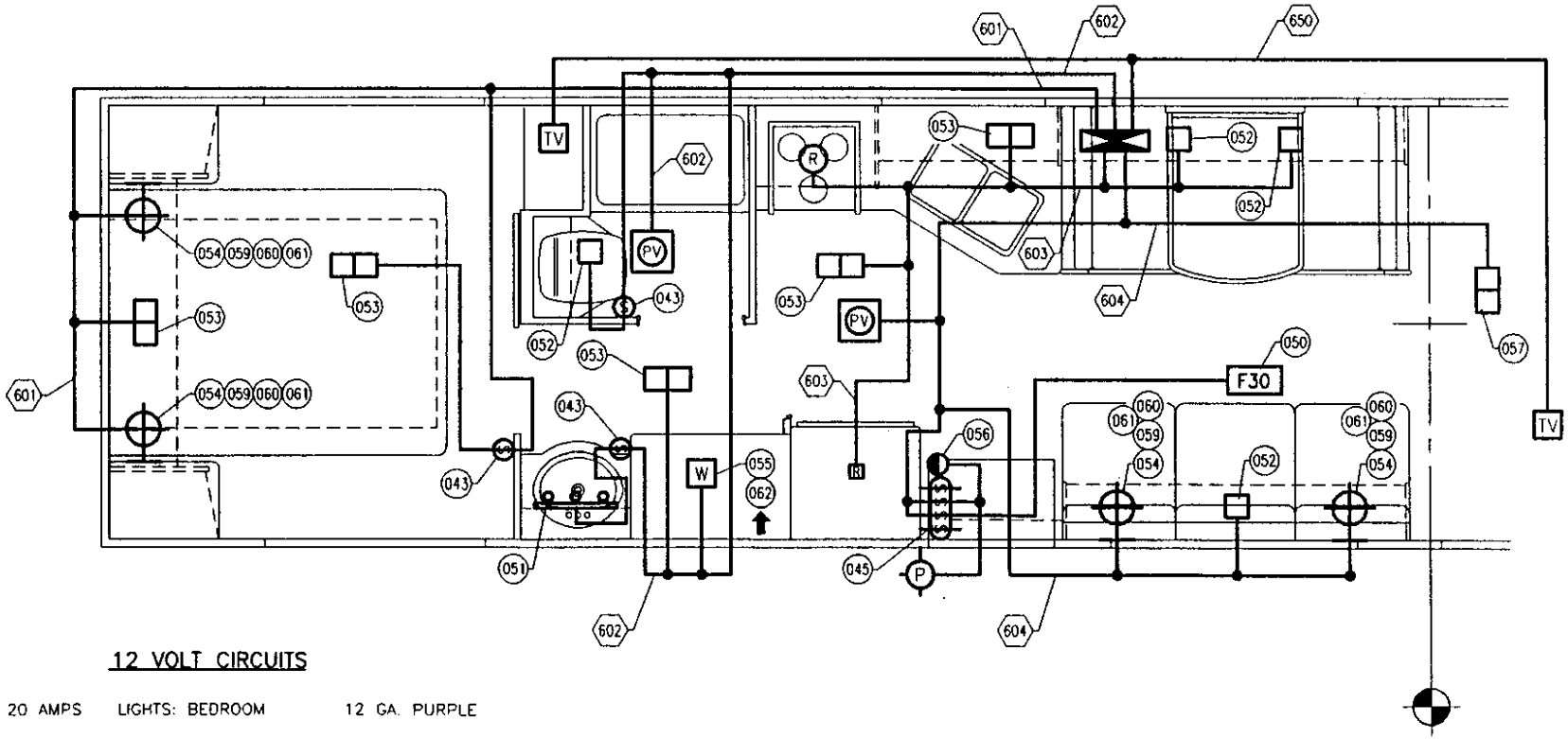

12 VOLT CIRCUITS

601	20 AMPS	LIGHTS: BEDROOM	12 GA. PURPLE
602	20 AMPS	LIGHTS: BATH	12 GA. GREEN
603	20 AMPS	LIGHTS: GALLEY	12 GA. BROWN
604	20 AMPS	LIGHTS: LIVING AREA	12 GA. YELLOW
650	20 AMPS	OPTIONAL TV	12 GA. ORANGE

D.C. RELEASE	DESCRIPTION	DATE	BY	SCALE: 1/2" = 1'-0"	USED ON:	FLEETWOOD RECREATIONAL VEHICLE GROUP	PAGE NO. 777-19-00005
97-01		05-08-96	BS	DRAWN: A.BAUTISTA / DATE: 10-24-95			SHEET 3 OF 3
97-02		06-04-96	BS	PROJECT: 97777303		TITLE: ELECTRICAL - 30E	
97-03		06-20-96	BS	PLOT: 06/20/96 14:10:43 01spinub	AUX. INFO.	12V INTERIOR	

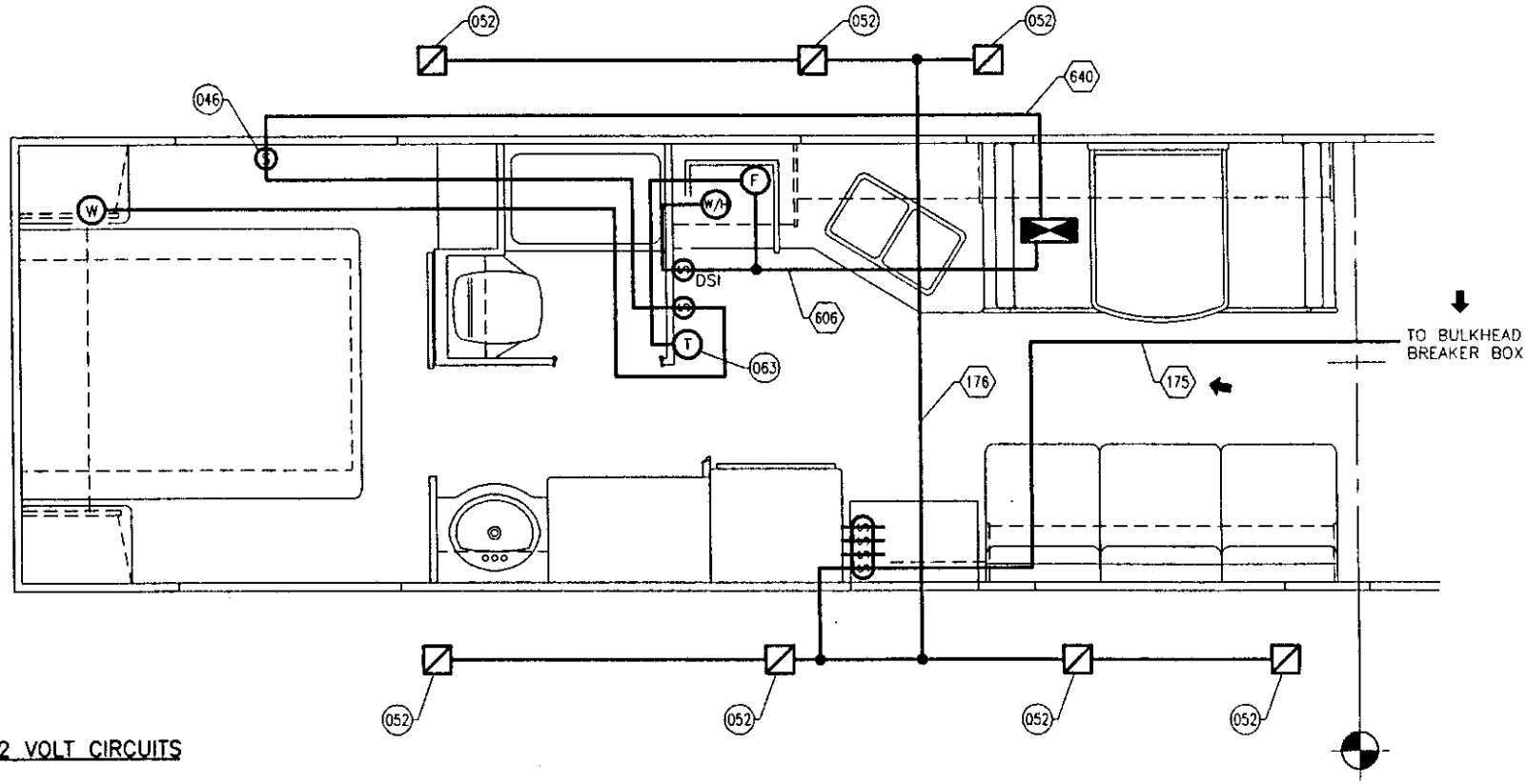

12 VOLT CIRCUITS

176	15 AMP	LIGHTS: LUGGAGE	14 GA. WHITE
606	20 AMP	APPLIANCES	12 GA. RED
640	20 AMP	WATER PUMP	12 GA. RED/BLK

D.C. RELEASE	DESCRIPTION	DATE	BY	SCALE: 1/2" = 1'-0"	USED ON:	FLEETWOOD RECREATIONAL VEHICLE GROUP	PAGE NO. 777-18-00005
				DRAWN: P. BRADY / DATE: 10-24-95			SHEET 3 OF 4
97-01		05-30-96	BS	PROJECT: 97777304		TITLE: CEILING - 30E	
97-04		08-01-96	BS	PLOT: 08/01/96 09:05:24 01spinub	AUX. INFO		

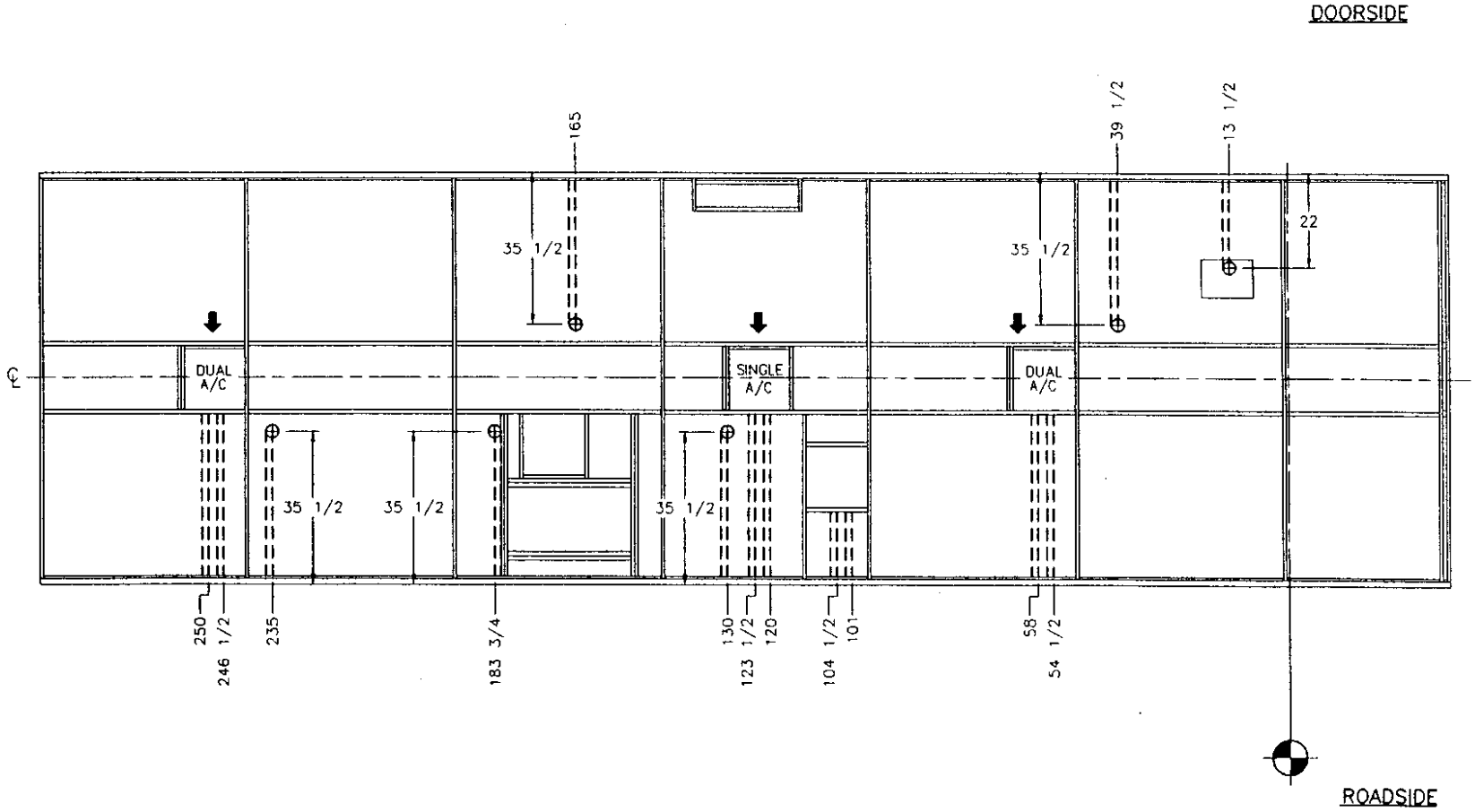

D.C. RELEASE	DESCRIPTION	DATE	BY	SCALE 5/16" = 1' 0"	PART No.	FLEETWOOD RECREATIONAL VEHICLE GROUP	PAGE NO. 777-19-95905
				DRAWN B.SPINUZZI / DATE 04-30-96			SHEET 1 OF 2
				PROJECT 97777301		TITLE WIRE HARNESS ROUTING INFO 30E	
97-01		05-02-96	BS	PLOT 05/02/96 11:31:54 01spinub	AUX INFO	120 VOLT	

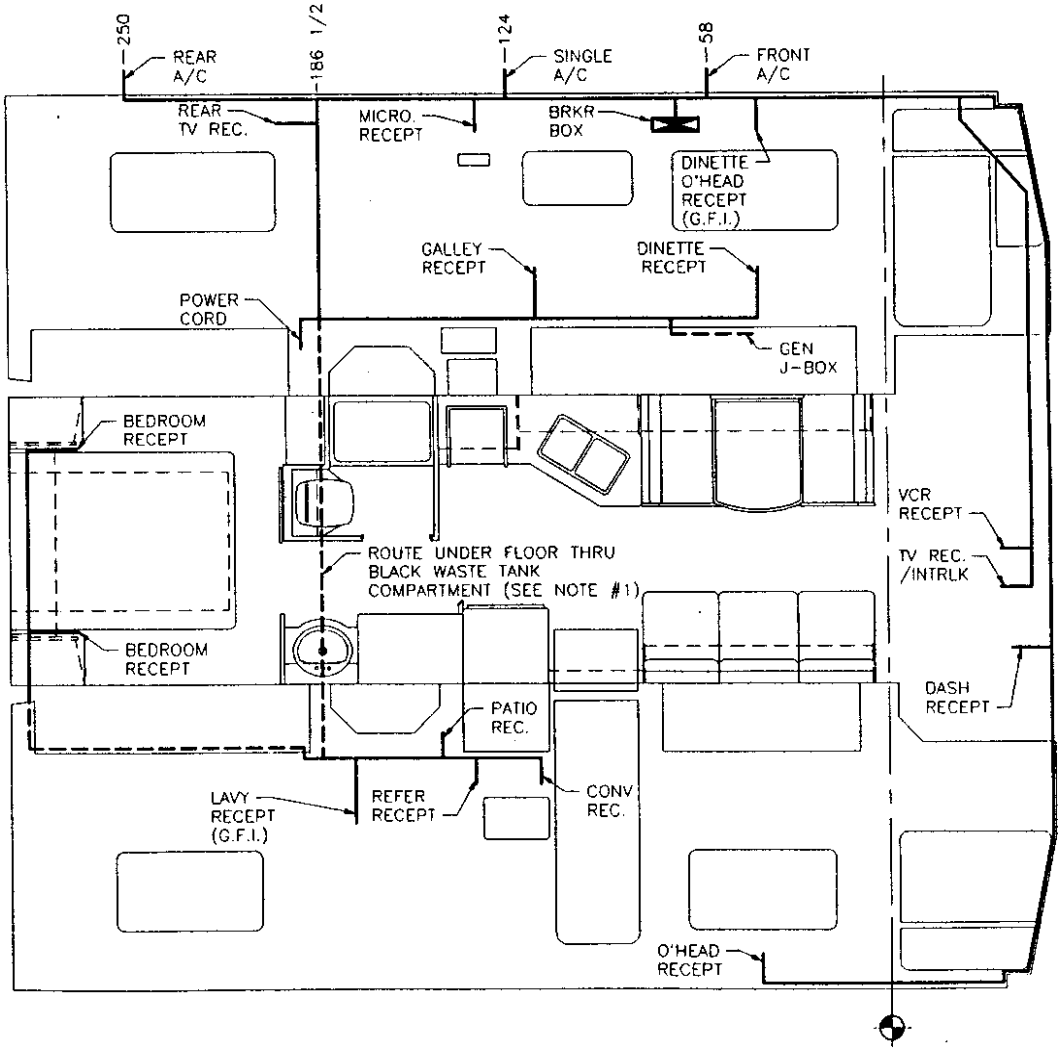

NOTES:

1. COVER WIRE W/LOOM-PLST 3/4 SPLIT 300 DEG RATING (F61-0206) & SECURE TO TRUSS W/ CLAMP- 7/8 INS LOOP (M85-0007) & SCREW- TEK #8 X 7/8 HI-LO TYPE S TEK 7/8 HI-LO TYPE S (M67-0806) @ 12" O.C.
2. ALL DIMENSIONS ARE FOR REFERENCE ONLY.
3. ONLY MAIN BRANCHES OF HARNESS SHOWN.

D.C. RELEASE	DESCRIPTION	DATE	BY	SCALE: 5/16" = 1'-0"	USED ON:	FLEETWOOD	PAGE NO. 777-19-95905
				DRAWN: B.SPINUZZI / DATE: 04-30-96		RECREATIONAL VEHICLE GROUP	SHEET 2 OF 2
				PROJECT: 97777301		TITLE: WIRE HARNESS ROUTING INFO 30E	
97-01		05-14-96	BS	PLOT: 05/14/96 07:04:01 01spinub	AUX INFO	12 VOLT	

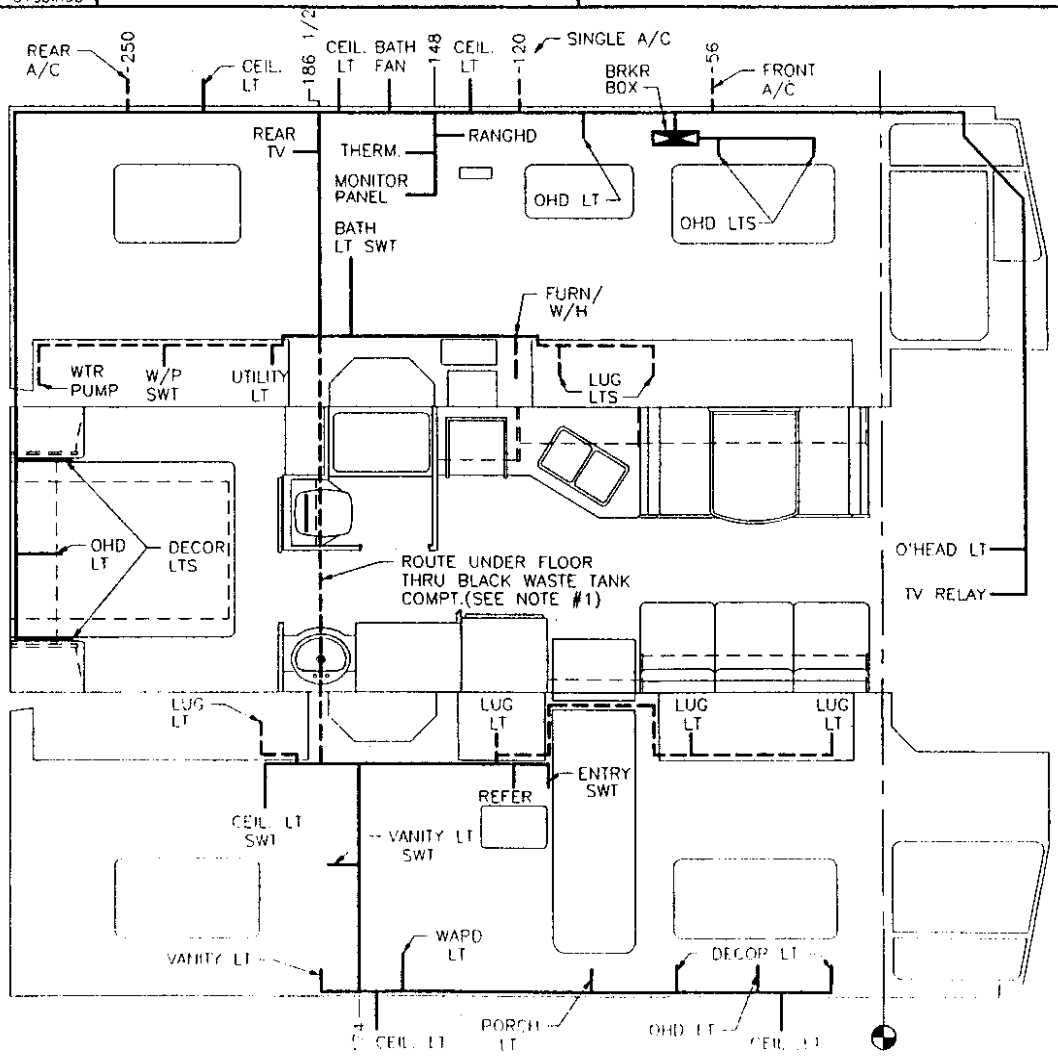

NOTES:

1. COVER WIRE W/LOOM-PLST 3/4 SPLIT 300 DEG RATING (F61-0206) & SECURE TO TRUSS W/ CLAMP- 7/8 INS LOOP (M85-0007) & SCREW- TEK #8 X 7/8 HI-LO TYPE S TEK 7/8 HI-LO TYPE S (M67-0806) @ 12" O.C.
2. ALL DIMENSIONS ARE FOR REFERENCE ONLY.
3. ONLY MAIN BRANCHES OF HARNESS SHOWN.

D.C. RELEASE	DESCRIPTION	DATE	BY	SCALE: 1/2" = 1'-0"	USED ON:	FLEETWOOD RECREATIONAL VEHICLE GROUP	PAGE NO. 777-19-00007
				DRAWN: S. LANE / DATE: 08-31-95			SHEET 1 OF 3
97-00		02-29-96	SL	PROJECT: 97777302		TITLE: ELECTRICAL- 32G	
97-02		06-04-96	BS	PLOT: 06/04/96 15:17:56 01spinub	AUX. INFO	120V INTERIOR	

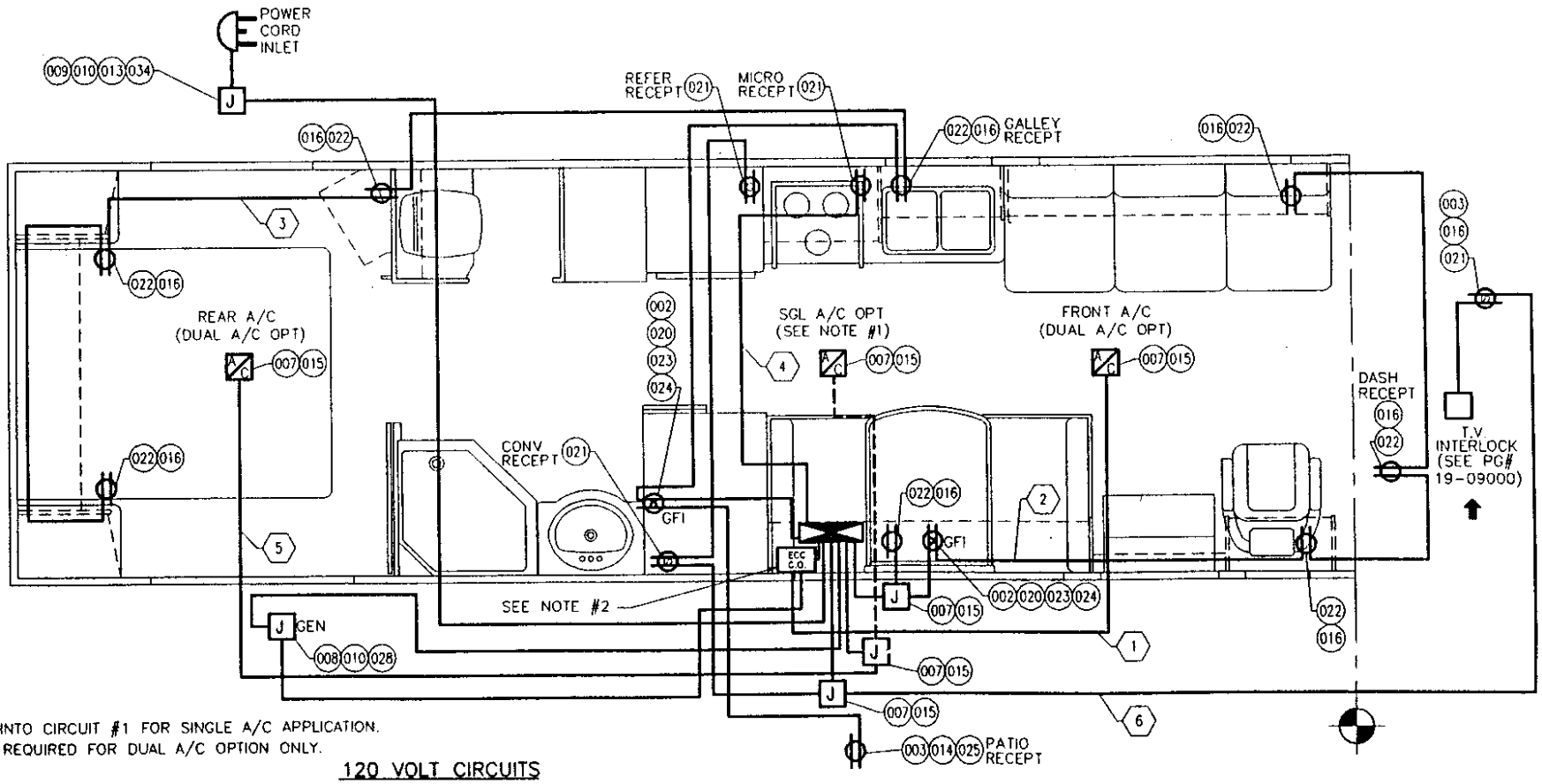

NOTES:
1. TAP INTO CIRCUIT #1 FOR SINGLE A/C APPLICATION.
2. ECC REQUIRED FOR DUAL A/C OPTION ONLY.

120 VOLT CIRCUITS

1	20 AMP	A/C ECC CHANGEOVER	12-2 W/GROUND	4	20 AMP	MICROWAVE	12-2 W/GROUND
2	20 AMP	GENERAL PURPOSE	12-2 W/GROUND	5	20 AMP	A/C	12-2 W/GROUND
3	15 AMP	GENERAL PURPOSE	14-2 W/GROUND	6	20 AMP	APPLIANCE	12-2 W/GROUND

D.C. RELEASE	DESCRIPTION	DATE	BY	SCALE 1/2" = 1'-0"	USED ON:	FLEETWOOD RECREATIONAL VEHICLE GROUP	PAGE NO. 777-19-00007
				DRAWN: S. LANE / DATE: 08-31-95			SHEET 2 OF 3
97-00		03-27-96	DM	PROJECT: 97777303		TITLE: ELECTRICAL- 32G	
97-03		06-14-96	RT	PLOT: 06/14/96 09:07:46 01torrer	AUX. INFO.	12V INTERIOR	

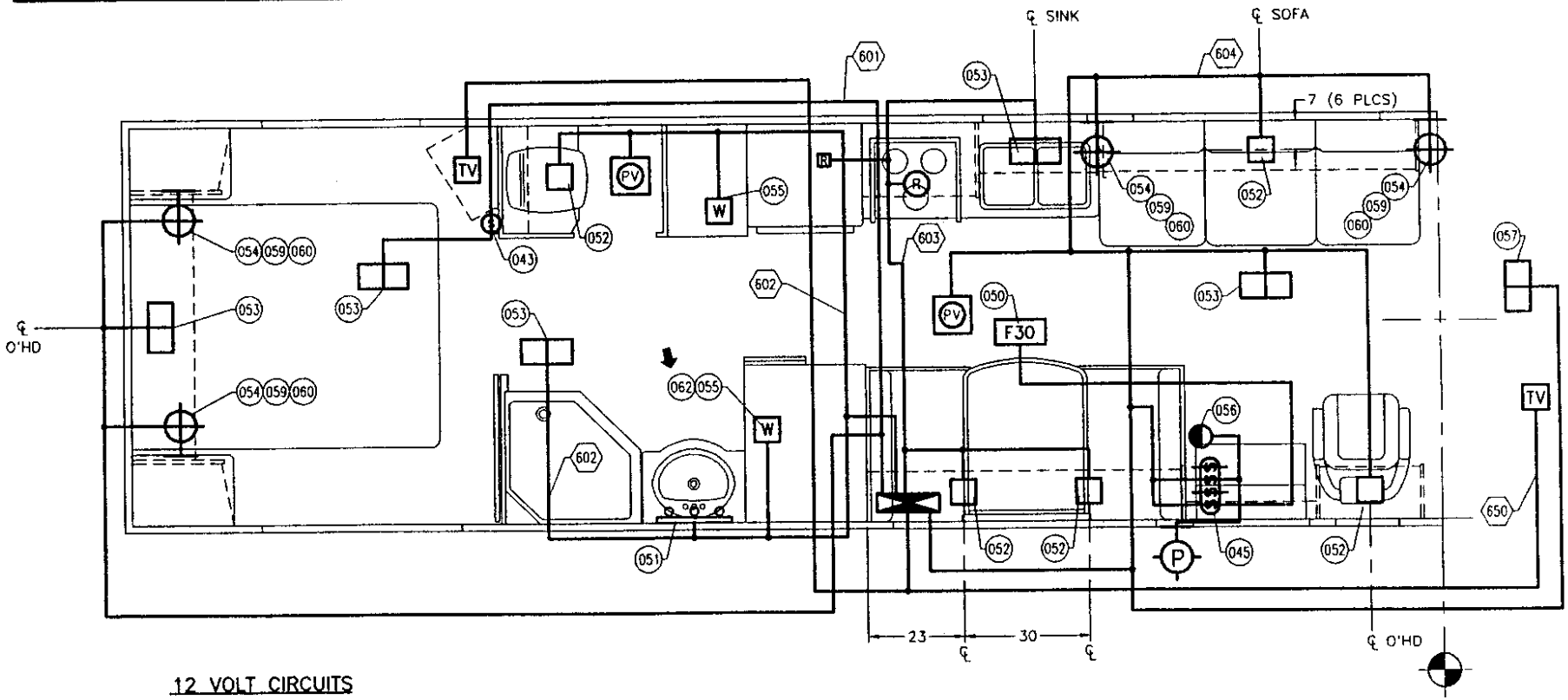

12 VOLT CIRCUITS

601	20 AMPS	LIGHTS: BEDROOM	12 GA. PURPLE
602	20 AMPS	LIGHTS: BATH	12 GA. GREEN
603	20 AMPS	LIGHTS: GALLEY	12 GA. BROWN
604	20 AMPS	LIGHTS: LIVING AREA	12 GA. YELLOW
650	20 AMPS	OPTIONAL TV	12 GA. ORANGE

D.C. RELEASE	DESCRIPTION	DATE	BY	SCALE: 1/2" = 1'-0"	USED ON:	FLEETWOOD RECREATIONAL VEHICLE GROUP	PAGE NO. 777-19-00007
				DRAWN: S. LANE / DATE: 09-01-95			SHEET 3 OF 3
97-00		03-27-96	DM	PROJECT: 97777303		TITLE: ELECTRICAL- 32G	
97-03		06-20-96	BS	PLOT: 06/20/96 14:17:30 01spinub	AUX. INFO.	12V INTERIOR	

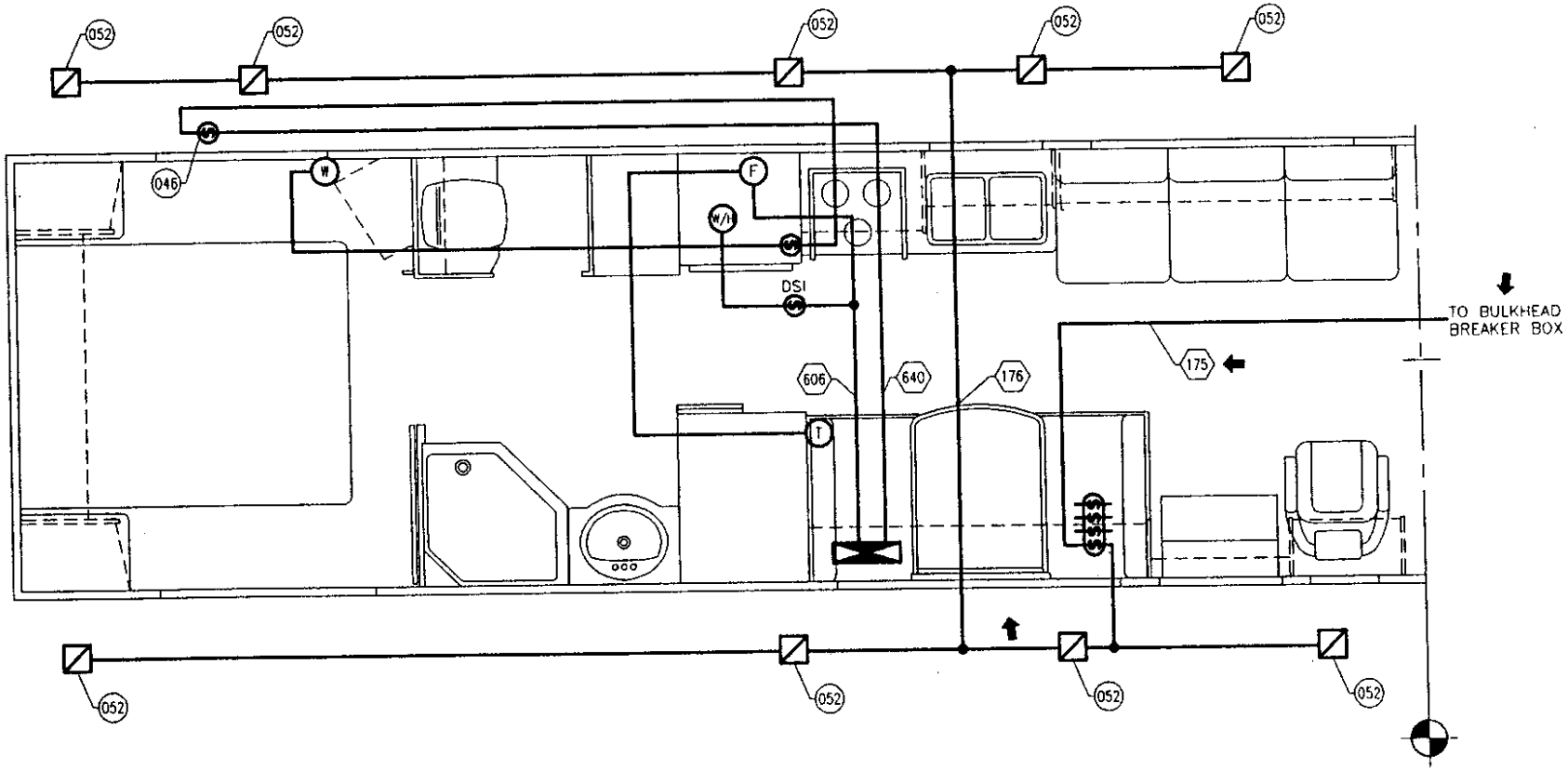

12 VOLT CIRCUITS

176	20 AMPS	LIGHTS: LUGGAGE	14 GA. WHITE
606	20 AMPS	APPLIANCES	12 GA. RED
640	20 AMPS	WATER PUMP	12 GA. RED/BLK

D.C. RELEASE	DESCRIPTION	DATE	BY
97-02		06-04-96	AB
97-03	ECL #026	06-20-96	BS
97-04		08-01-96	RT

SCALE: 1/2" = 1'-0"
DRAWN: R.TORRES DATE: 05-09-95
PROJECT: 97777304
PLOT: 08/01/96 08:40:59 Oltorrer
USED ON:
AUX. INFO.

FLEETWOOD RECREATIONAL VEHICLE GROUP
PAGE NO. 777-18-00007
SHEET 3 OF 4
TITLE: CEILING - 32G

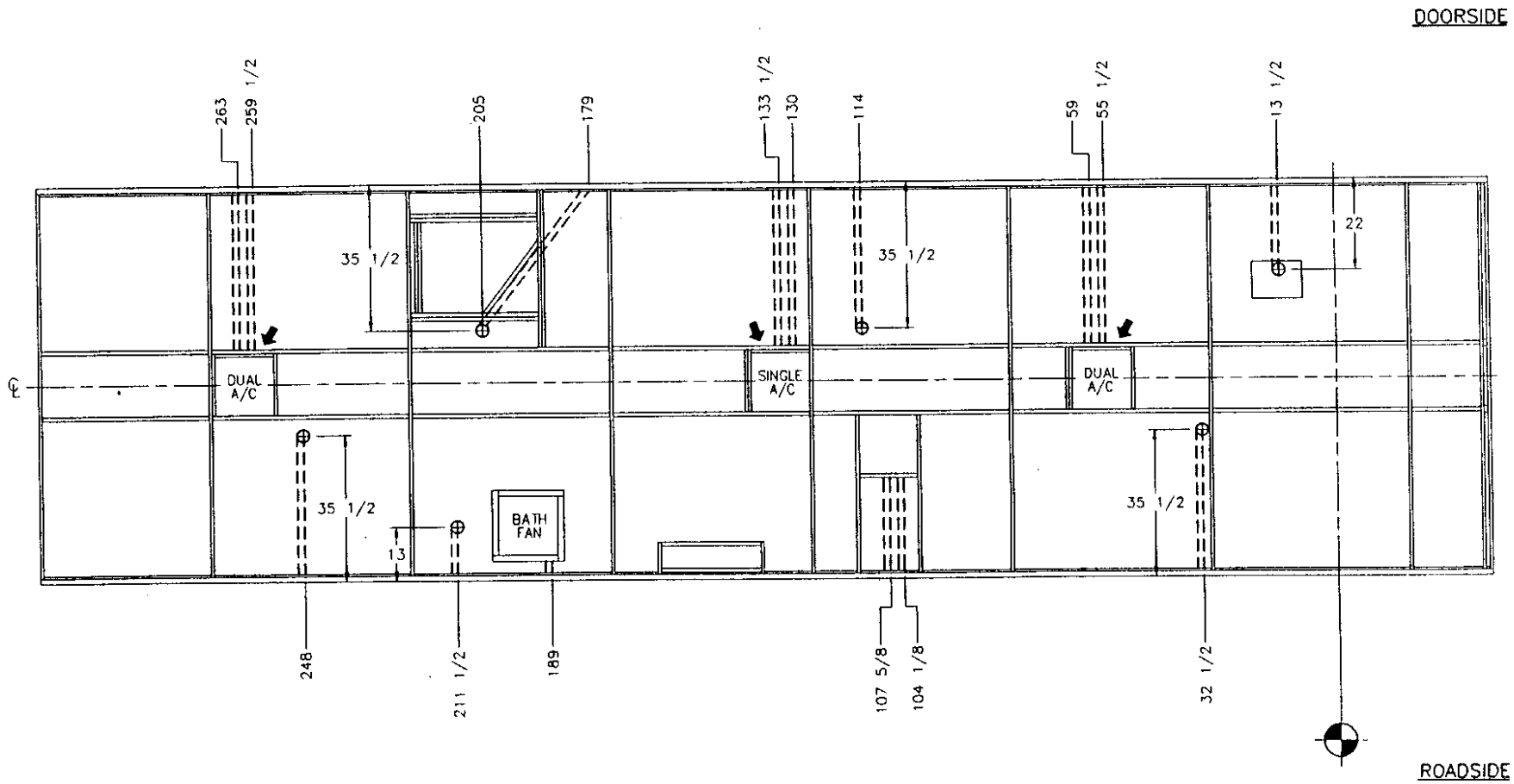

D.C. RELEASE	DESCRIPTION	DATE	BY	SCALE: 5/16" = 1'-0"	USED ON:	FLEETWOOD RECREATIONAL VEHICLE GROUP	PAGE NO. 777-19-95907
				DRAWN: S. LANE / DATE 09-01-95			SHEET 1 OF 2
97-00		03-27-96	DM	PROJECT: 97777302		TITLE: WIRE HARNESS ROUTING INFO 32G	
97-02		06-05-96	AD	PLOT: 06/05/96 07:52:42 Oldeleoa	AUX INFO	120 VOLT	

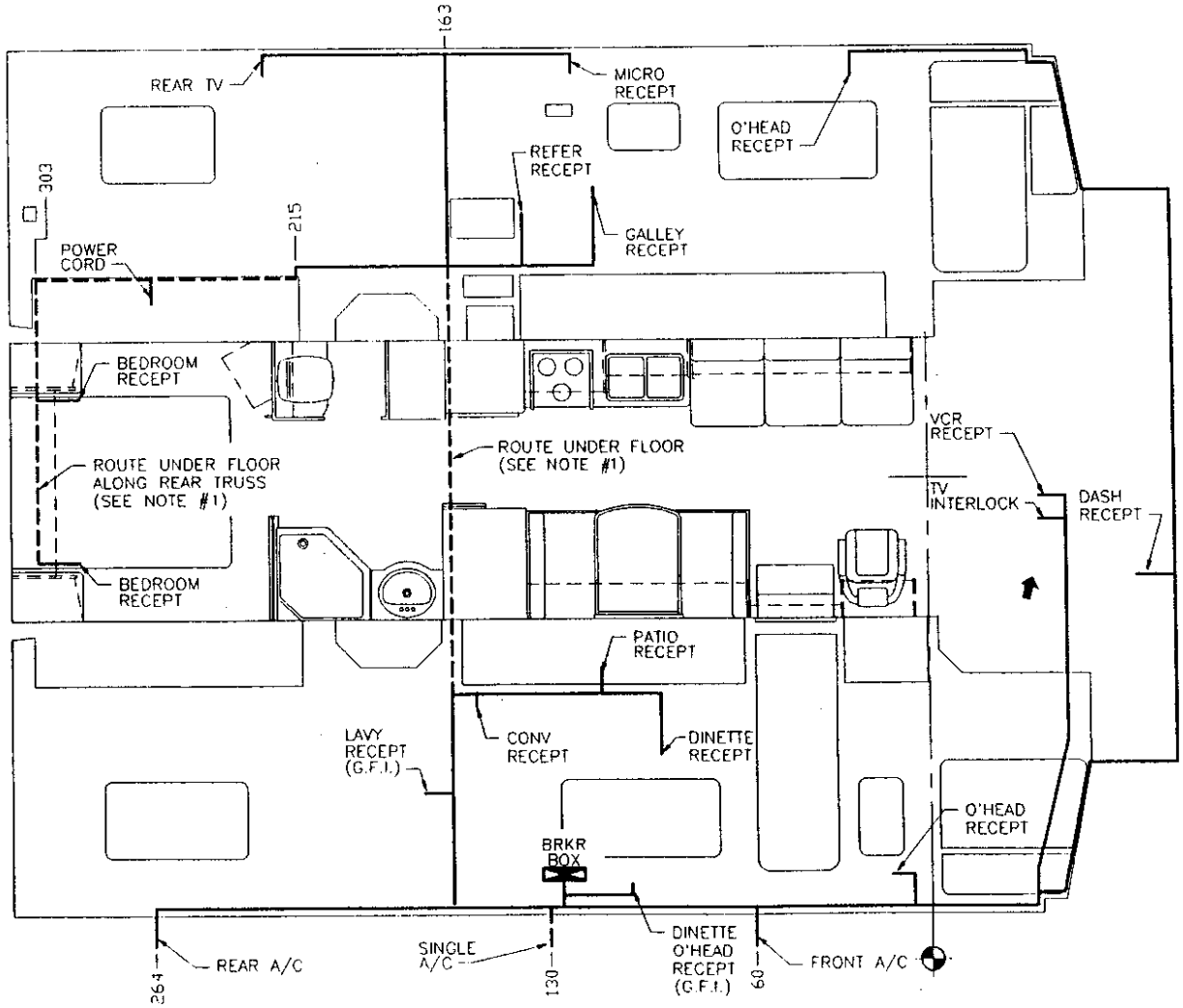

NOTES:

1. COVER WIRE W/LOOM-PLST 3/4 SPLIT 300 DEG RATING (F61-0206) & SECURE TO TRUSS W/ CLAMP- 7/8 INS LOOP (M85-0007) & SCREW- TEK #8 X 7/8 HI-LO TYPE S TEK 7/8 HI-LO TYPE S (M67-0806) @ 12" O.C.
2. ALL DIMENSIONS ARE FOR REFERENCE ONLY.
3. ONLY MAIN BRANCHES OF HARNESS SHOWN.

D.C. RELEASE	DESCRIPTION	DATE	BY
97-00		03-27-96	DM
97-02		06-05-96	AD

SCALE 5/16" = 1'-0"
DRAWN S LANE
DATE 09-01-95
PROJECT 97777302
PLOT 06/05/96 07:48:57 01deleoa
ISSUED IN
AUX INFO

FLEETWOOD RECREATIONAL VEHICLE GROUP

PAGE NO. 777-19-95907
SHEET 2 OF 2

TITLE: WIRE HARNESS ROUTING INFO 32G
12 VOLT

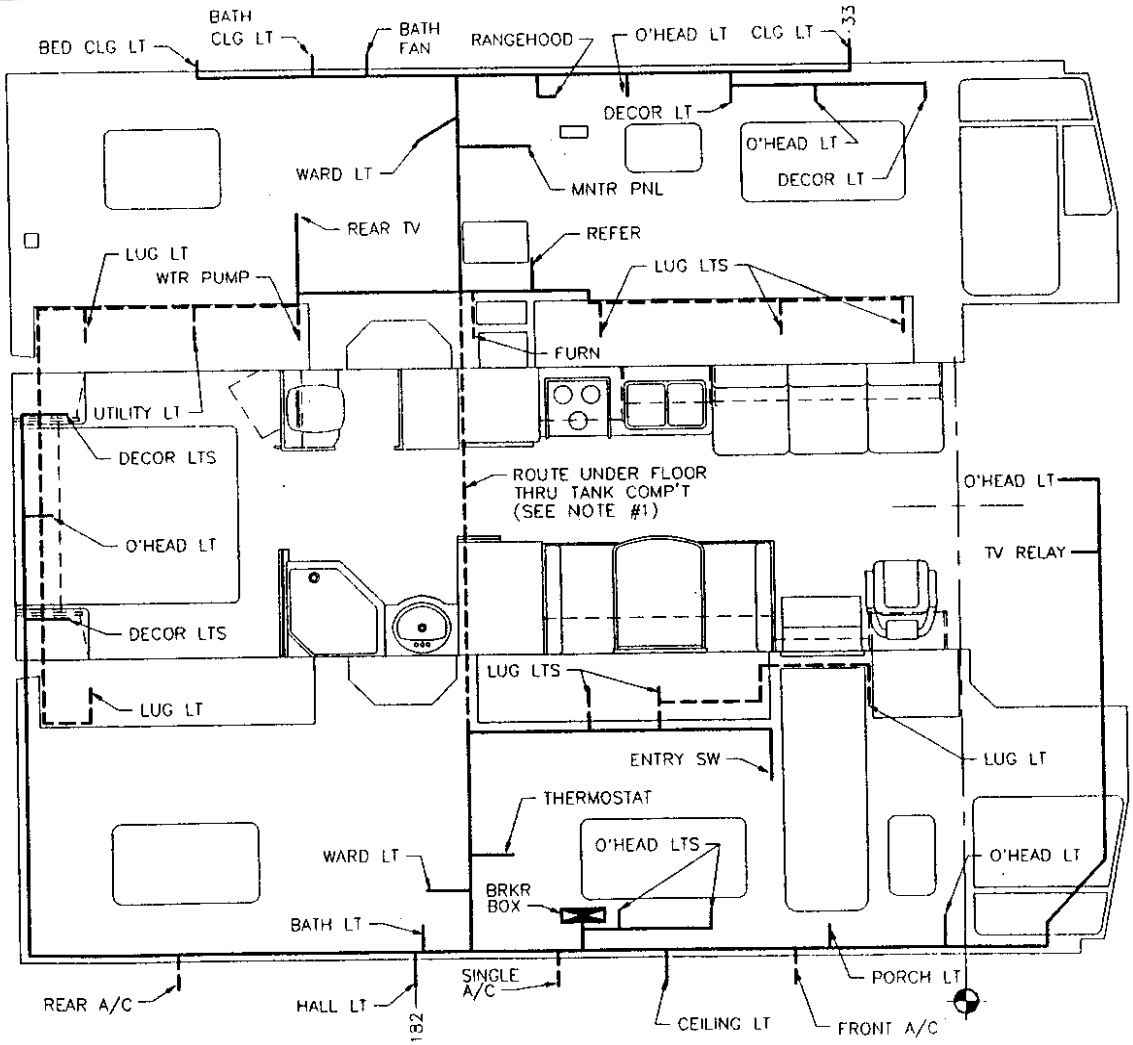

NOTES:
1. COVER WIRE W/LOOM-PLST 3/4 SPLIT 300 DEG RATING (F61-0206) & SECURE TO TRUSS W/ CLAMP- 7/8 INS LOOP (M85-0007) & SCREW- TEK #8 X 7/8 HI-LO TYPE S TEK 7/8 HI-LO TYPE S (M67-0806) @ 12" O.C.
2. ALL DIMENSIONS ARE FOR REFERENCE ONLY.
3. ONLY MAIN BRANCHES OF HARNESS SHOWN.

D.C. RELEASE	DESCRIPTION	DATE	BY	SCALE: 1/2" = 1'-0"	USED ON:	FLEETWOOD RECREATIONAL VEHICLE GROUP	PAGE NO. 777-19-00010
				DRAWN: S. LANE / DATE: 08-24-95			SHEET 1 OF 3
97-00		04-12-96	BS	PROJECT: 97777302		TITLE: ELECTRICAL- 34J	
97-02		06-04-96	AD	PLOT: 06/04/96 13:28:34 01deleoa	AUX. INFO	120V INTERIOR	

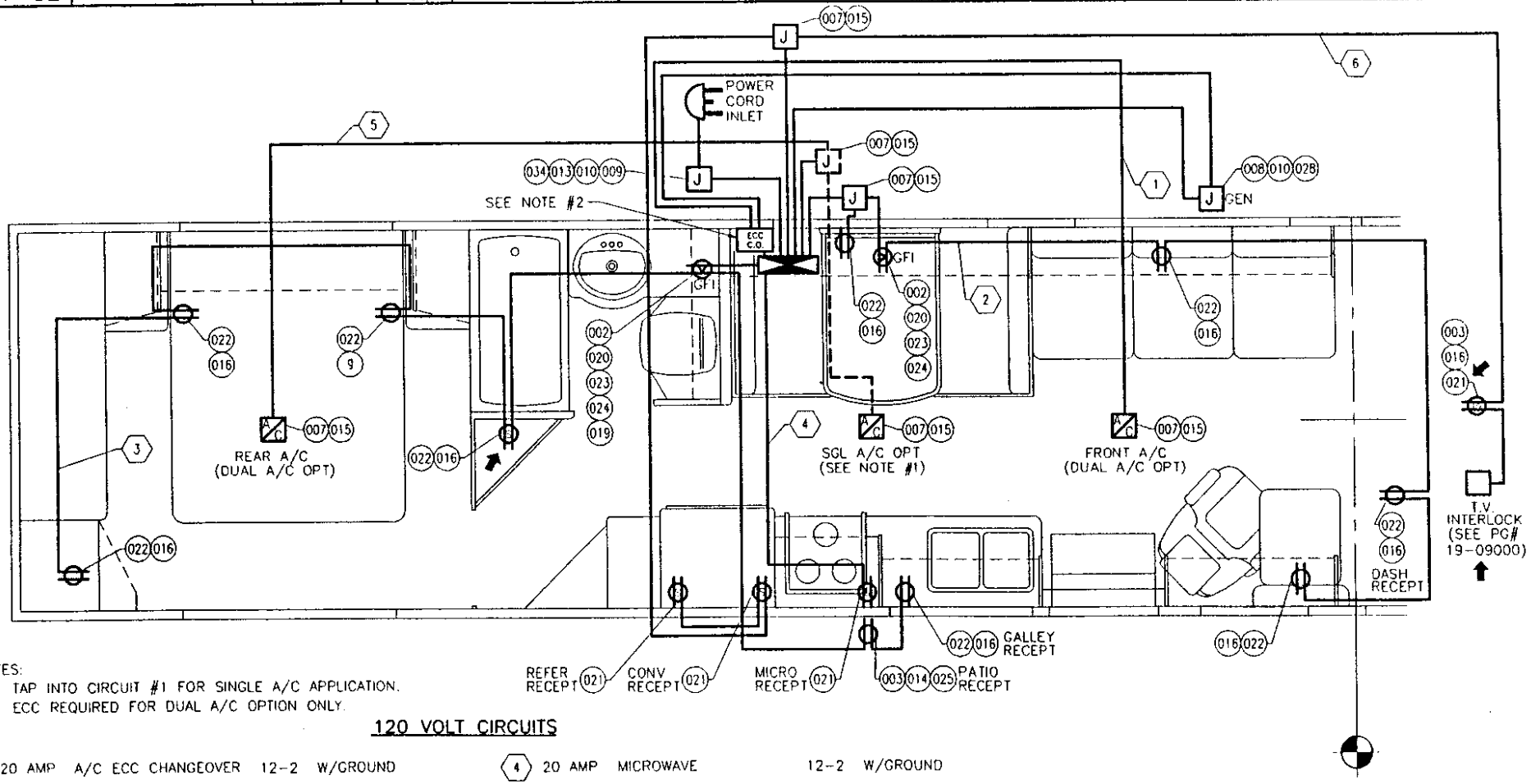

NOTES:
1. TAP INTO CIRCUIT #1 FOR SINGLE A/C APPLICATION.
2. ECC REQUIRED FOR DUAL A/C OPTION ONLY.

120 VOLT CIRCUITS

1	20 AMP	A/C ECC CHANGEOVER	12-2 W/GROUND	4	20 AMP	MICROWAVE	12-2 W/GROUND
2	20 AMP	GENERAL PURPOSE	12-2 W/GROUND	5	20 AMP	A/C	12-2 W/GROUND
3	15 AMP	GENERAL PURPOSE	14-2 W/GROUND	6	20 AMP	APPLIANCE	12-2 W/GROUND

D.C. RELEASE	DESCRIPTION	DATE	BY	SCALE: 1/2" = 1'-0"	USED ON:	FLEETWOOD RECREATIONAL VEHICLE GROUP	PAGE NO. 777-19-00010
				DRAWN: S. LANE / DATE: 08-24-95			SHEET 2 OF 3
97-00		03-27-96	DM	PROJECT: 97777303		TITLE: ELECTRICAL- 34J	
97-03		06-14-96	RT	PLOT: 06/14/96 09:26:07 01torrer	AUX INFO.	12V INTERIOR	

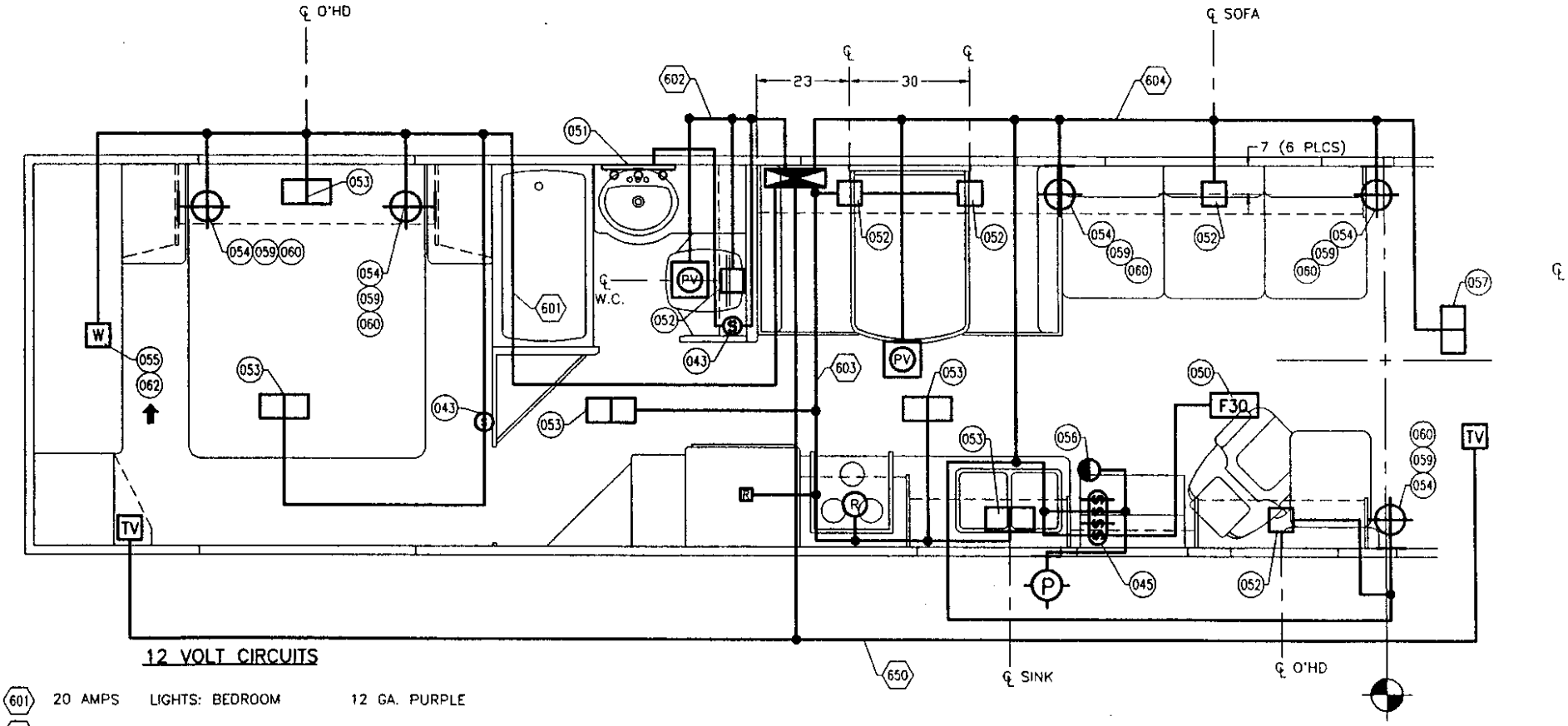

12 VOLT CIRCUITS

601	20 AMPS	LIGHTS: BEDROOM	12 GA. PURPLE
602	20 AMPS	LIGHTS: BATH	12 GA. GREEN
603	20 AMPS	LIGHTS: GALLEY	12 GA. BROWN
604	20 AMPS	LIGHTS: LIVING AREA	12 GA. YELLOW
650	20 AMPS	OPTIONAL TV	12 GA. ORANGE

D.C. RELEASE	DESCRIPTION	DATE	BY	SCALE: 1/2" = 1'-0"	USED ON:	FLEETWOOD RECREATIONAL VEHICLE GROUP	PAGE NO. 777-19-00010
97-00		03-27-96	DM	DRAWN: S. LANE / DATE: 08-24-95			SHEET 3 OF 3
97-02		06-04-96	AD	PROJECT: 97777303		TITLE: ELECTRICAL- 34J	
97-03		06-20-96	BS	PLOT: 06/20/96 14:20:29 01spinub	AUX. INFO.	12V INTERIOR	

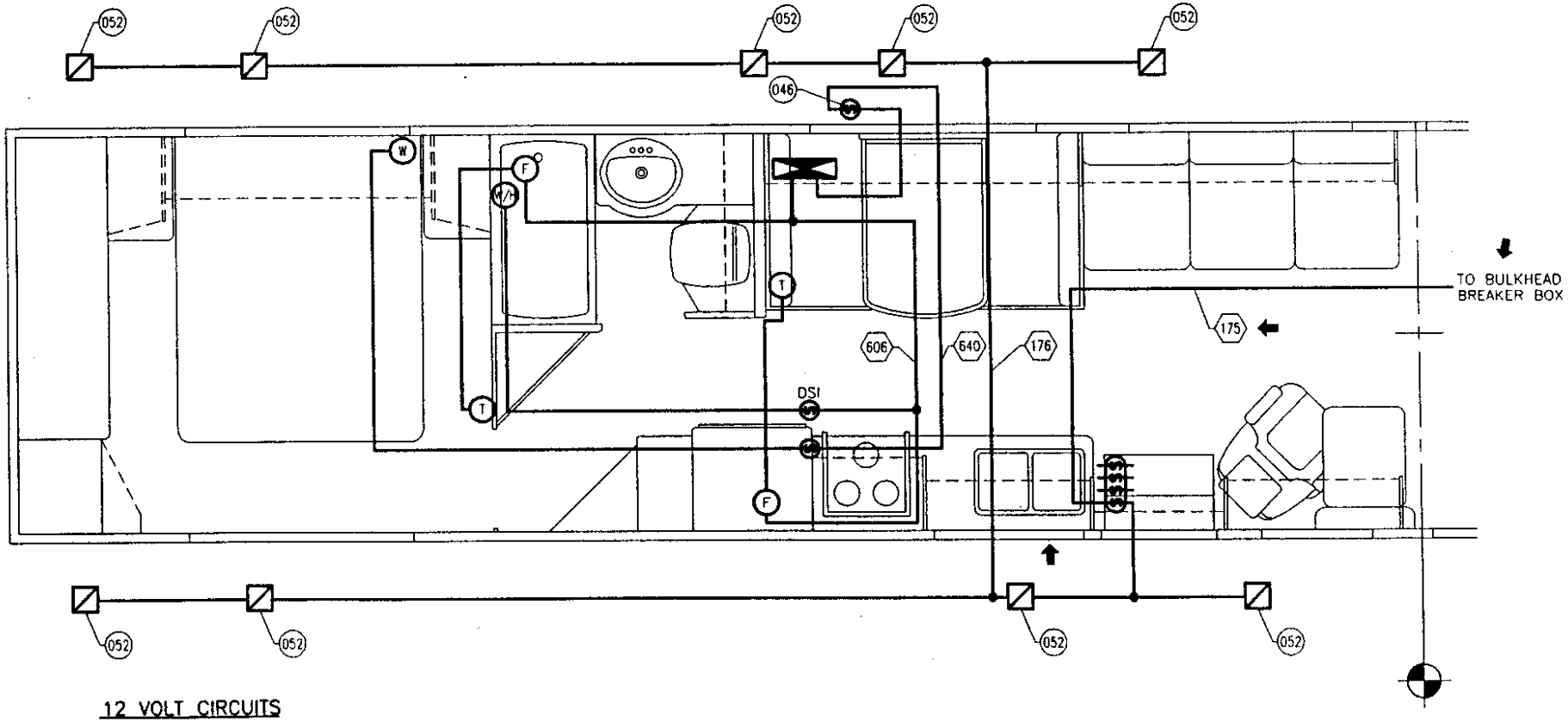

12 VOLT CIRCUITS

176	15 AMP	LIGHTS: LUGGAGE	14 GA. WHITE
606	20 AMP	APPLIANCES	12 GA. RED
640	20 AMP	WATER PUMP	12 GA. RED/BLK

D.C. RELEASE	DESCRIPTION	DATE	BY	SCALE: 1/2" = 1'-0"	USED ON:	FLEETWOOD RECREATIONAL VEHICLE GROUP	PAGE NO. 777-18-00010
97-00		03-21-96	RT	DRAWN: R.TORRES DATE: 07-13-95			SHEET 3 OF 4
97-02		06-05-96	AB	PROJECT: 97777304		TITLE: CEILING - 34J	
97-04		08-01-96	RT	PLOT: 08/01/96 10:33:58 01torrer	AUX. INFO.		

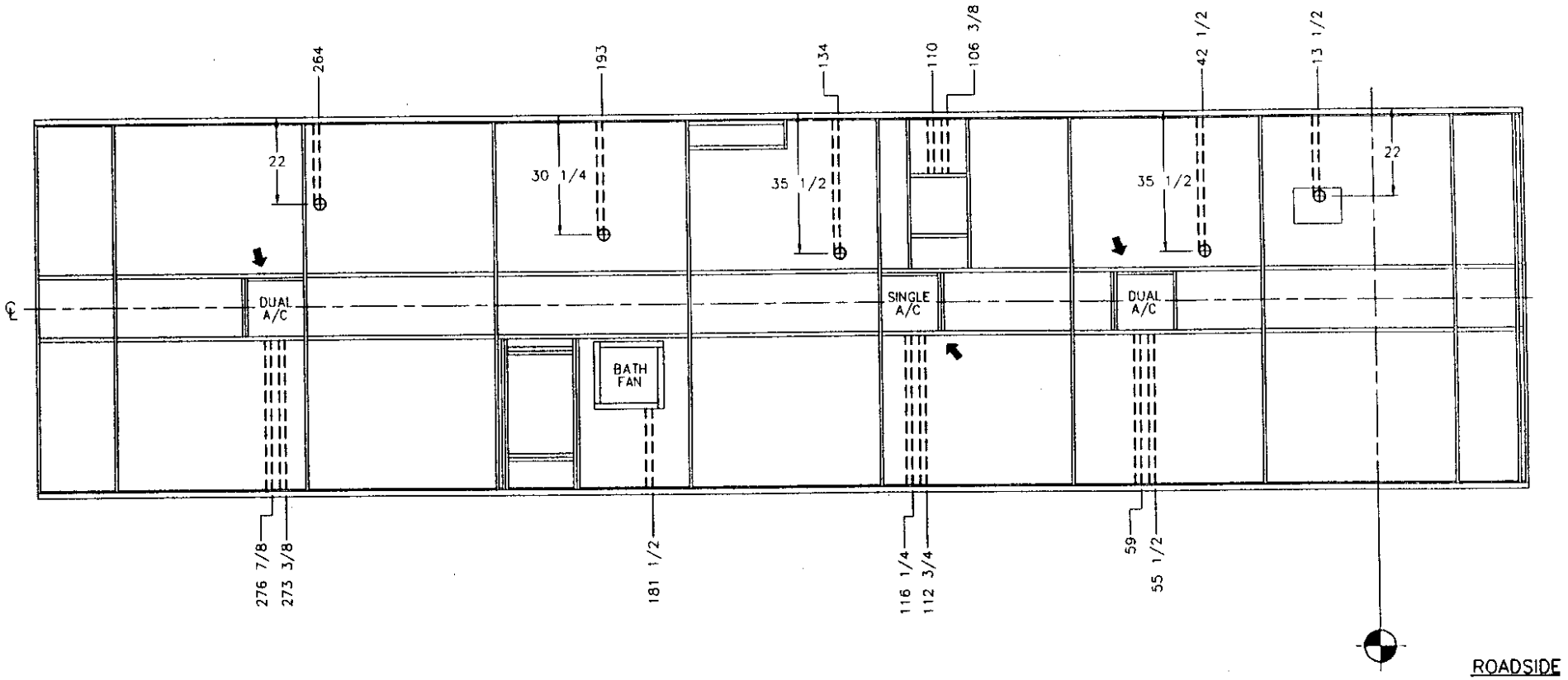

D.C. RELEASE	DESCRIPTION	DATE	BY
97-00		03-27-96	DM
97-02		06-05-96	AD

SCALE 5/16" = 1'-0"
DRAWN S. LANE DATE 08-24-95
PROJECT: 97777302
PLOT: 06/05/96 07:23:23 01deleoa
USER INFO
AUX INFO

FLEETWOOD RECREATIONAL VEHICLE GROUP
PAGE NO. 777-19-95910
SHEET 1 OF 2
TITLE: WIRE HARNESS ROUTING INFO 34J
120 VOLT

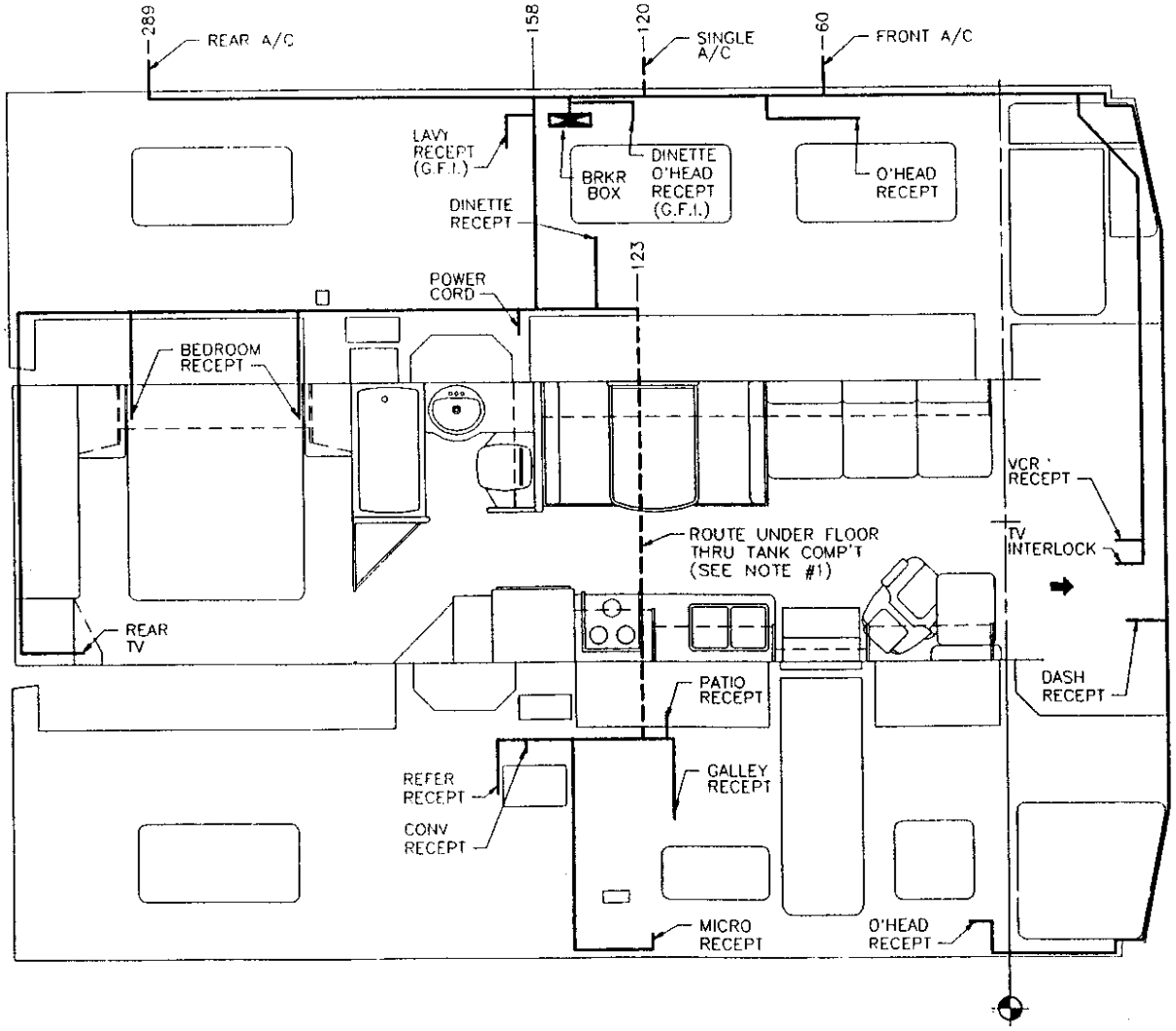

NOTES:

1. COVER WIRE W/LOOM-PLST 3/4 SPLIT 300 DEG RATING (F61-0206) & SECURE TO TRUSS W/ CLAMP- 7/8 INS LOOP (M85-0007) & SCREW- TEK #8 X 7/8 HI-LO TYPE S TEK 7/8 HI-LO TYPE S (M67-0806) @ 12" O.C.
2. ALL DIMENSIONS ARE FOR REFERENCE ONLY.
3. ONLY MAIN BRANCHES OF HARNESS SHOWN.

D.C. RELEASE	DESCRIPTION	DATE	BY	SCALE: 5/16" = 1'-0"	USED ON:	FLEETWOOD RECREATIONAL VEHICLE GROUP	PAGE NO. 777-19-95910
				DRAWN: S. LANE / DATE: 08-28-95			SHEET 2 OF 2
97-00		03-27-96	DM	PROJECT: 97777302		TITLE: WIRE HARNESS ROUTING INFO 34J	
97-02		06-05-96	AD	PLOT: 06/05/96 08:08:37 01deleoa	AUX INFO.	12 VOLT	

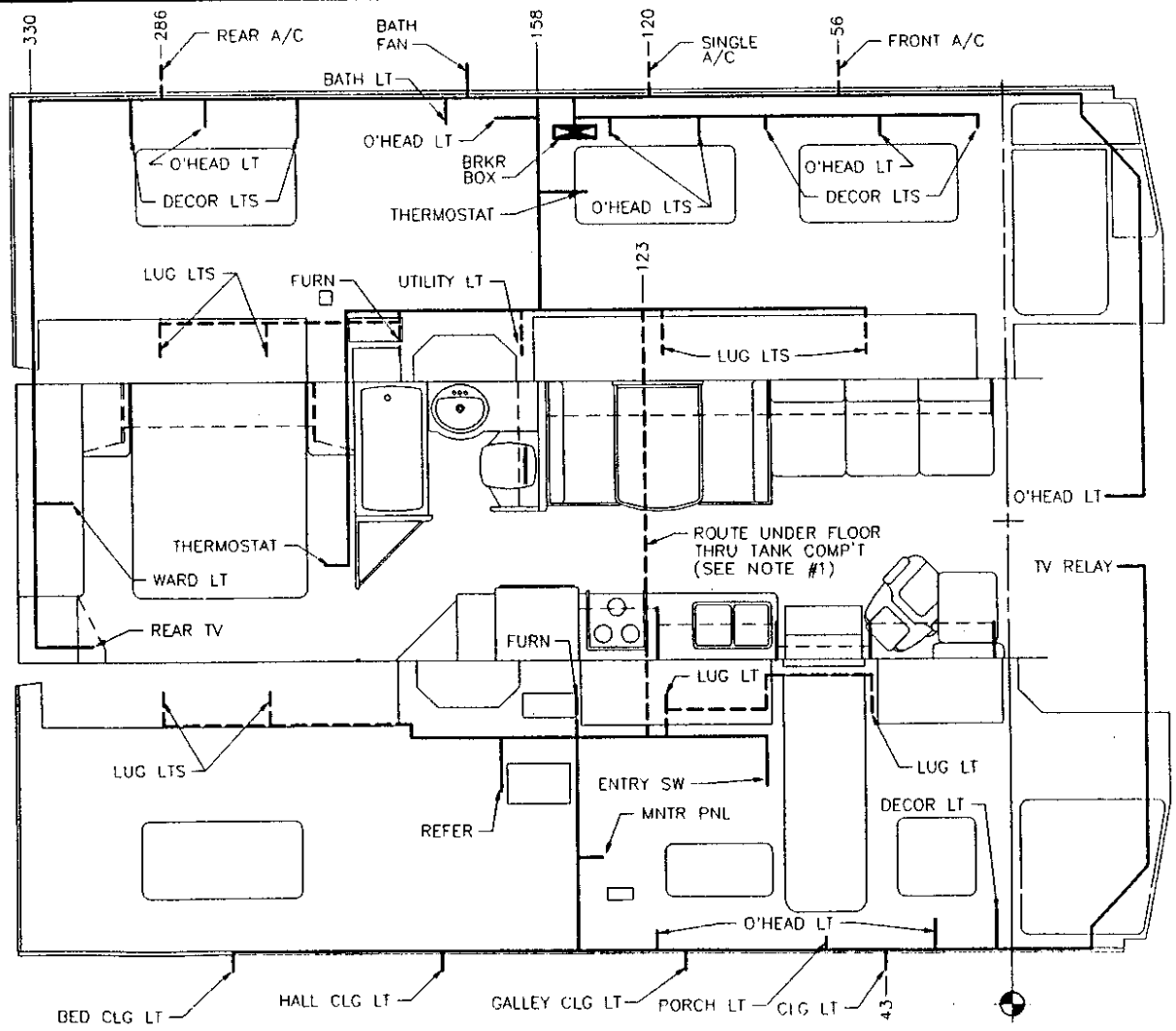

NOTES:

1. COVER WIRE W/LOOM-PLST 3/4 SPLIT 300 DEG RATING (F61-0206) & SECURE TO TRUSS W/ CLAMP- 7/8 INS LOOP (M85-0007) & SCREW- TEK #8 X 7/8 HI-LO TYPE S TEK 7/8 HI-LO TYPE S (M67-0806) @ 12" O.C.
2. ALL DIMENSIONS ARE FOR REFERENCE ONLY.
3. ONLY MAIN BRANCHES OF HARNESS SHOWN.

C. RELEASE	DESCRIPTION	DATE	BY
97-00		04-12-96	BS
97-02		06-04-96	AD

SCALE 1/4" = 1'-0"
DRAWN S.STACHOWSK DATE 07-24-95
PROJECT 97777302
PLOT 06/04/96 14:17:42 01deleoa
AUX INFO

FLEETWOOD RECREATIONAL VEHICLE GROUP

PAGE NO. 777-19-00016
SHEET 1 OF 3

TITLE: ELECTRICAL- 34P
120V INTERIOR

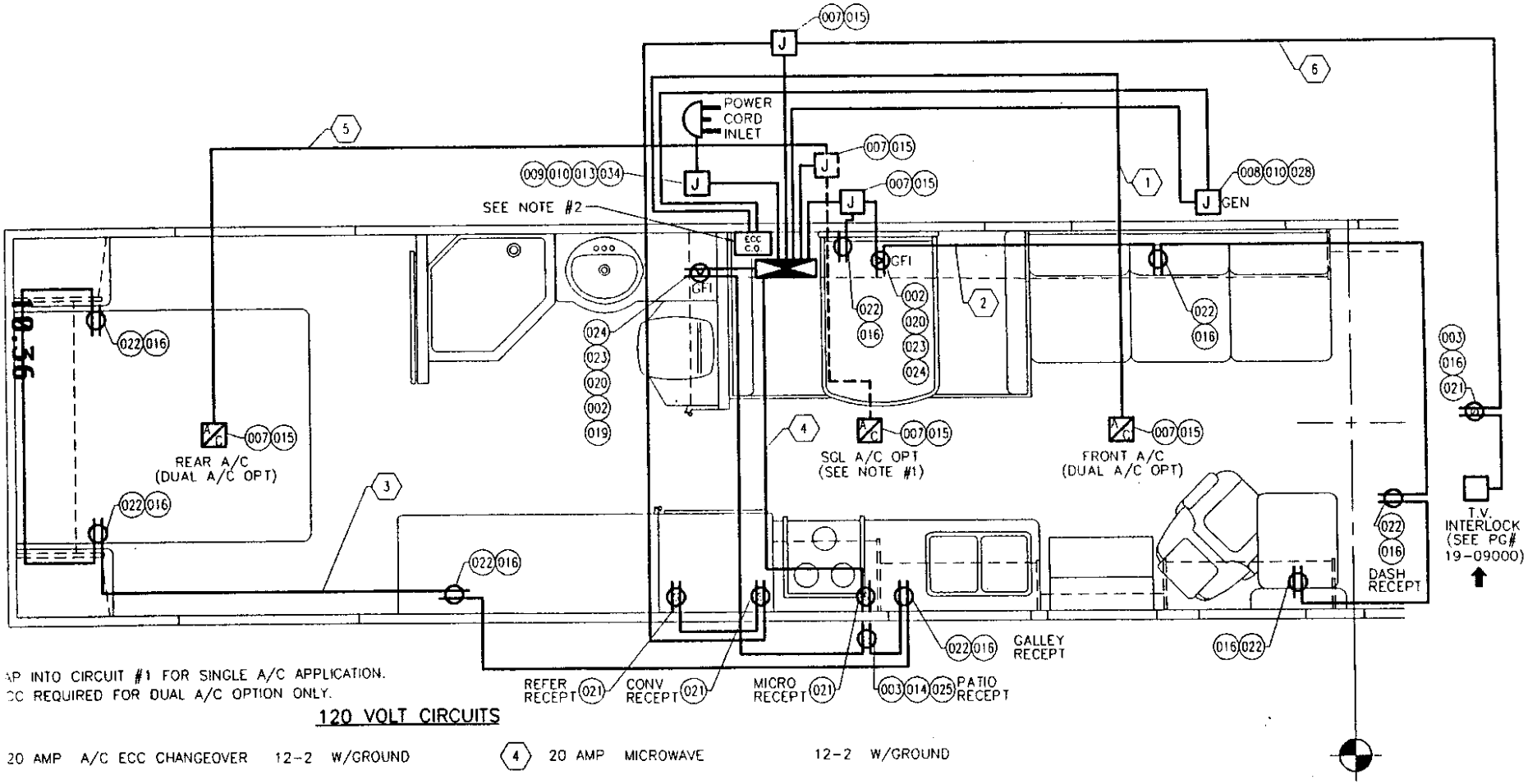

AP INTO CIRCUIT #1 FOR SINGLE A/C APPLICATION.
CC REQUIRED FOR DUAL A/C OPTION ONLY.

120 VOLT CIRCUITS

20 AMP	A/C ECC CHANGEOVER	12-2	W/GROUND	4	20 AMP	MICROWAVE	12-2 W/GROUND
20 AMP	GENERAL PURPOSE	12-2	W/GROUND	5	20 AMP	A/C	12-2 W/GROUND
15 AMP	GENERAL PURPOSE	14-2	W/GROUND	6	20 AMP	APPLIANCE	12-2 W/GROUND

D.C. RELEASE	DESCRIPTION	DATE	BY	SCALE: 1/2" = 1'-0"	USED ON:	FLEETWOOD RECREATIONAL VEHICLE GROUP	PAGE NO. 777-19-00016
				DRAWN: S.STACHOWSK DATE: 08-07-95			SHEET 2 OF 3
97-00		03-27-96	DM	PROJECT: 97777303		TITLE: ELECTRICAL- 34P	
97-03		06-14-96	RT	PLOT: 06/14/96 09:28:58 01torrer	AUX INFO.	12V INTERIOR	

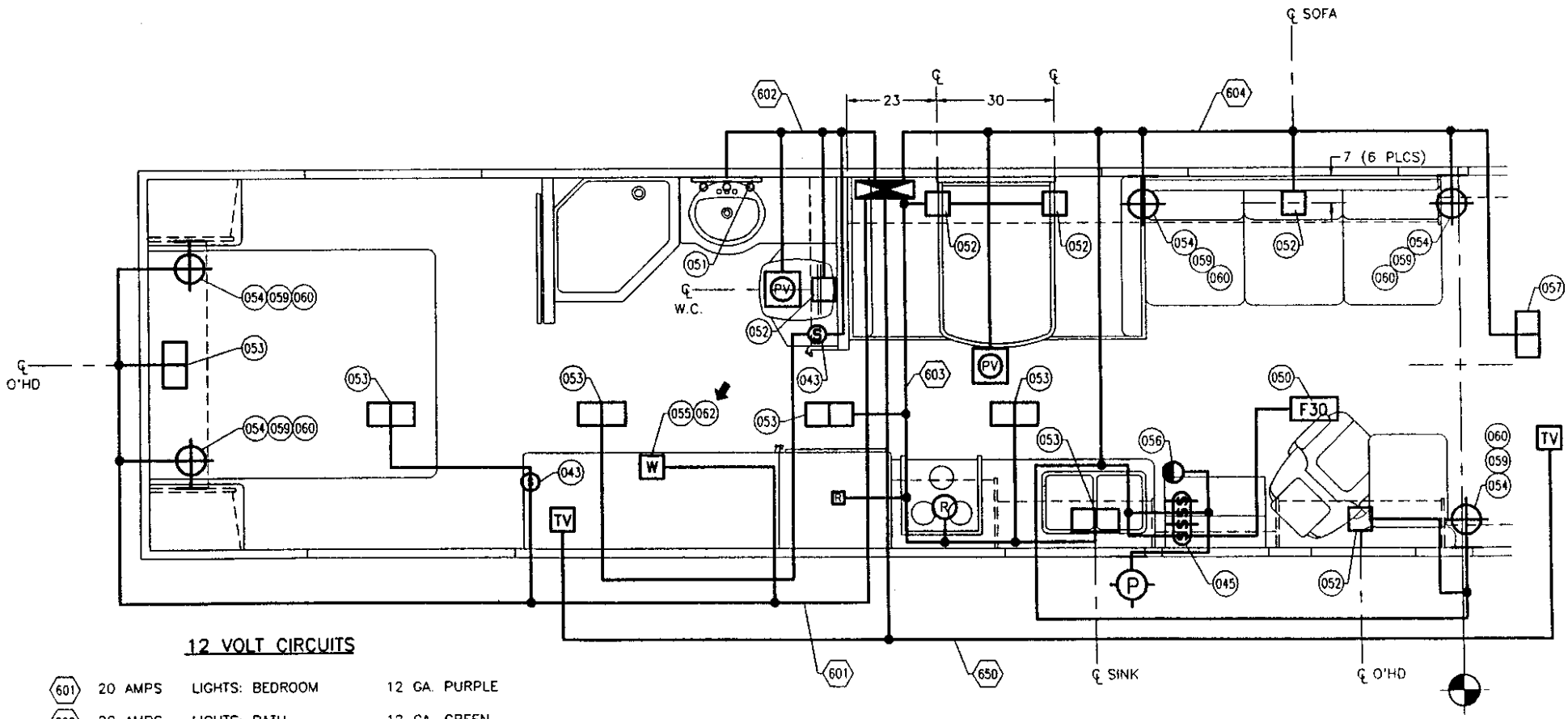

12 VOLT CIRCUITS

601	20 AMPS	LIGHTS: BEDROOM	12 GA. PURPLE
602	20 AMPS	LIGHTS: BATH	12 GA. GREEN
603	20 AMPS	LIGHTS: GALLEY	12 GA. BROWN
604	20 AMPS	LIGHTS: LIVING AREA	12 GA. YELLOW
650	20 AMPS	OPTIONAL TV	12 GA. ORANGE

D.C. RELEASE	DESCRIPTION	DATE	BY	SCALE: 1/2" = 1'-0"	USED ON:	FLEETWOOD RECREATIONAL VEHICLE GROUP	PAGE NO. 777-19-00016
97-00		03-27-96	DM	DRAWN: S.STACHOWSK DATE: 08-09-95			SHEET 3 OF 3
97-02		06-04-96	AD	PROJECT: 97777303		TITLE: ELECTRICAL- 34P	
97-03		06-20-96	BS	PLOT: 06/20/96 14:22:09 01spinub	AUX. INFO.	12V INTERIOR	

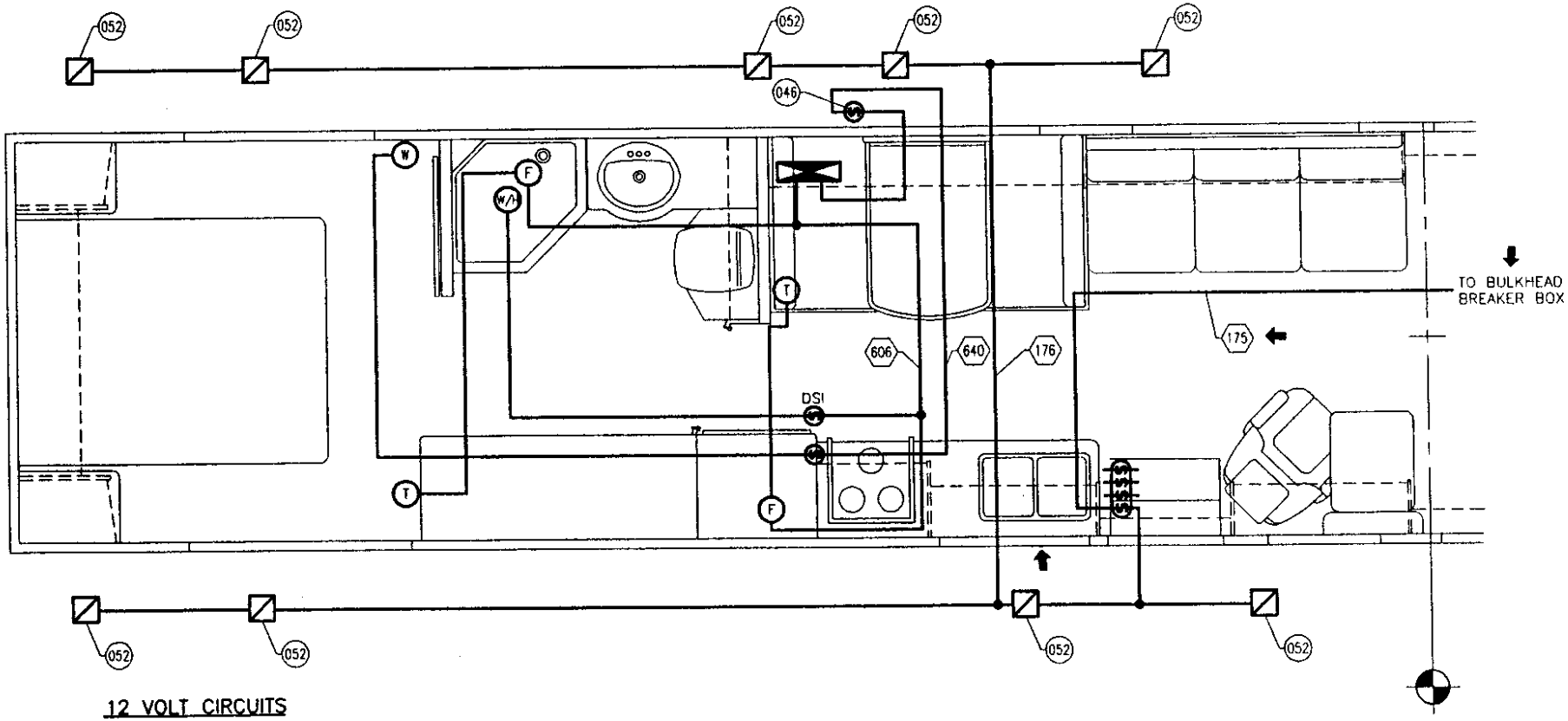

12 VOLT CIRCUITS

176	15 AMP	LIGHTS: LUGGAGE	14 GA. WHITE
606	20 AMP	APPLIANCES	12 GA. RED
640	20 AMP	WATER PUMP	12 GA. RED/BLK

D.C. RELEASE	DESCRIPTION	DATE	BY	SCALE 1/2" = 1'-0"	USED ON:
97-00		03-22-96	RT	DRAWN R.TORRES / DATE 07-18-95	
97-02		06-05-96	AB	PROJECT: 97777304	
97-04		08-01-96	BS	PLOT 08/01/96 09:36:20 01spinub	AUX INFO

FLEETWOOD RECREATIONAL VEHICLE GROUP

PAGE NO. 777-18-00016

SHEET 3 OF 4

TITLE: CEILING - 34P

DOORSIDE

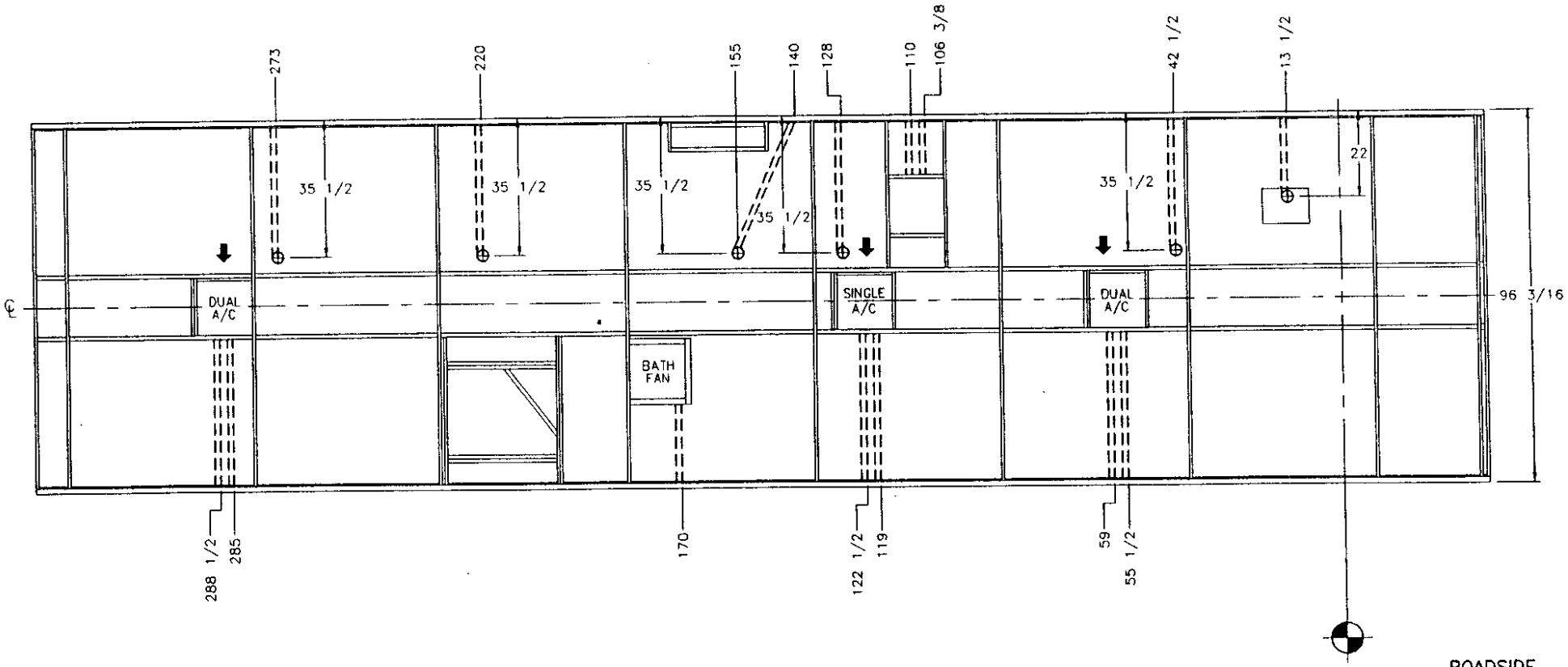

ROADSIDE

D.C. RELEASE	DESCRIPTION	DATE	BY
97-00		03-27-96	DM
97-02		06-05-96	AD

SCALE 5/16" = 1'-0"
DRAWN S.STACHOWSK DATE 08-01-95
PROJECT 97777302
PLOT: 06/05/96 08:10:17 Oldeleoo
USED IN
AUX. INFO

FLEETWOOD RECREATIONAL VEHICLE GROUP

PAGE NO. 777-19-95916
SHEET 1 OF 2

TITLE: WIRE HARNESS ROUTING INFO 34P
120 VOLT

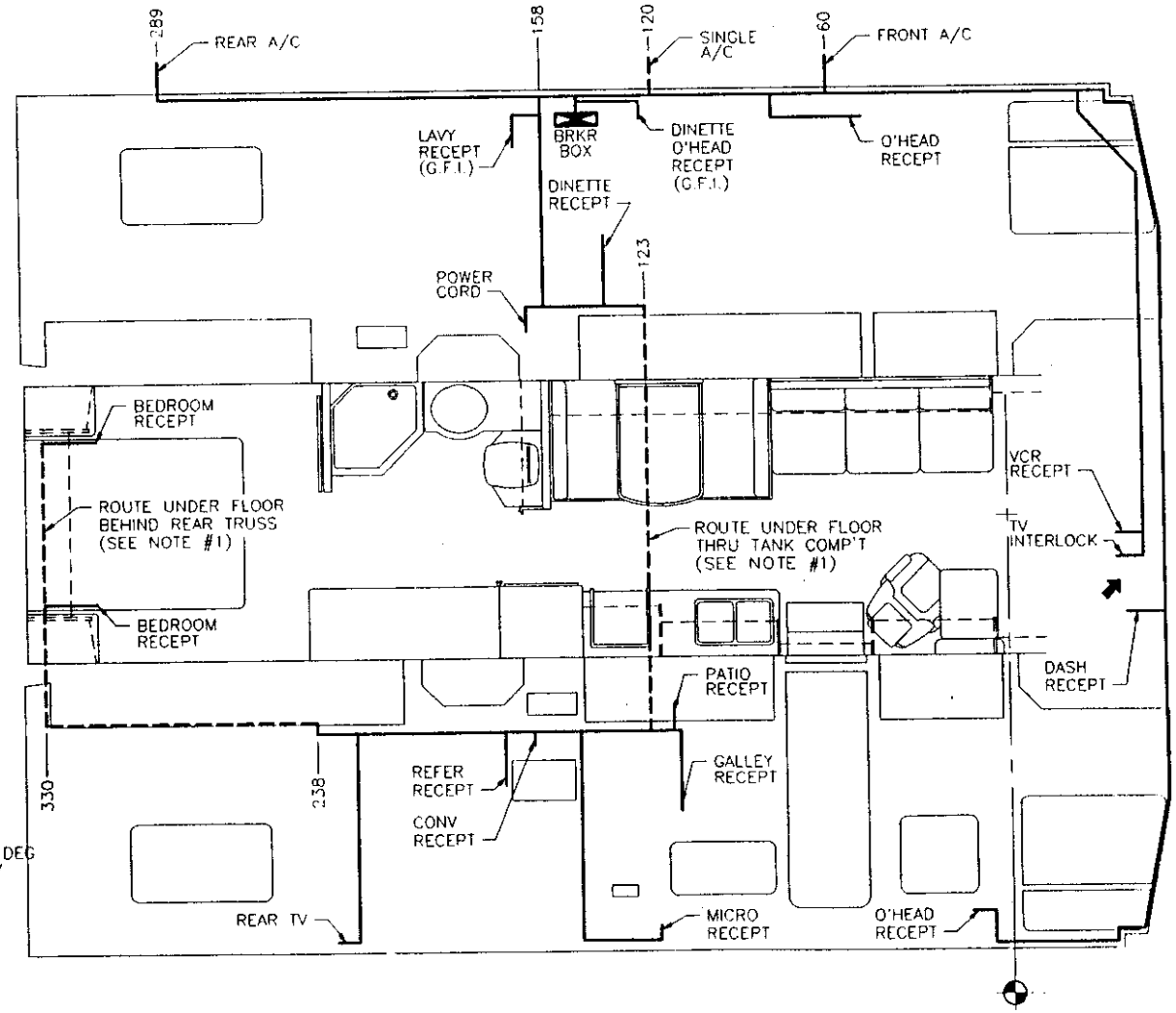

NOTES:

1. COVER WIRE W/ LOOM-PLST 3/4 SPLIT 300 DEG RATING (F61-0206) & SECURE TO TRUSS W/ CLAMP- 7/8 INS LOOP (M85-0007) & SCREW- TEK #8 X 7/8 IH-LO TYPE S TEK 7/8 HI-LO TYPE S (M67-0806) @ 12" O.C.
2. ALL DIMENSIONS ARE FOR REFERENCE ONLY.
3. ONLY MAIN BRANCHES OF HARNESS SHOWN.

D.C. RELEASE	DESCRIPTION	DATE	BY	SCALE 5/16" = 1'-0"	USED IN	FLEETWOOD RECREATIONAL VEHICLE GROUP	PAGE NO. 777-19-95916
				DRAWN S. LANE / DATE 08-15-95			SHEET 2 OF 2
97-00		03-27-96	DM	PROJECT 97777302		TITLE: WIRE HARNESS ROUTING INFO 34P	
97-02		06-05-96	AD	PLOT 06/05/96 08:11:43 01deleco	AUX. INFO	12 VOLT	

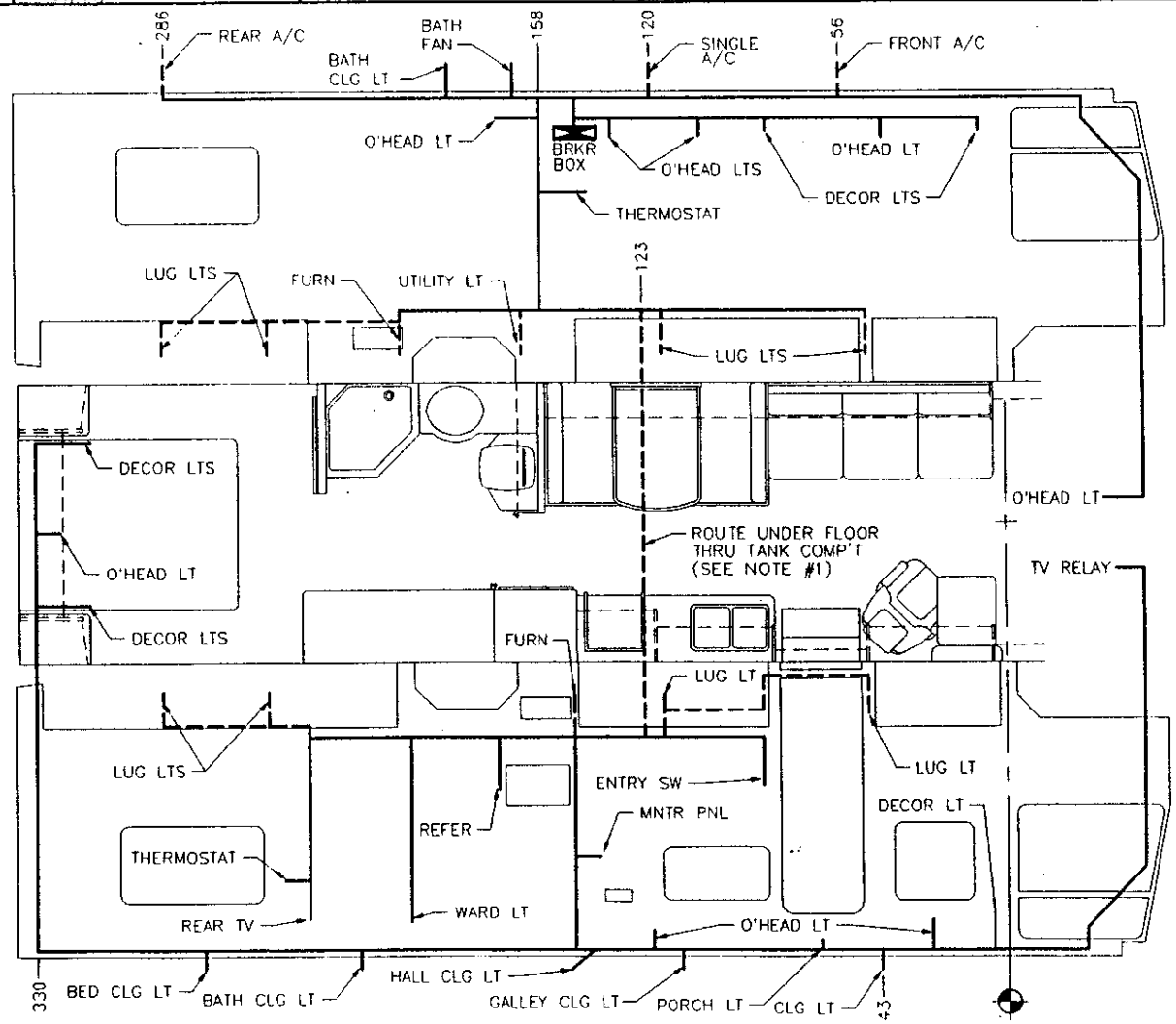

NOTES:

1. COVER WIRE W/ LOOM-PLST 3/4 SPLIT 300 DEG RATING (F61-0206) & SECURE TO TRUSS W/ CLAMP- 7/8 INS LOOP (M85-0007) & SCREW- TEK #8 X 7/8 HI-LO TYPE S TEK 7/8 HI-LO TYPE S (M67-0806) @ 12" O.C.
2. ALL DIMENSIONS ARE FOR REFERENCE ONLY.
3. ONLY MAIN BRANCHES OF HARNESS SHOWN.

D.C. RELEASE	DESCRIPTION	DATE	BY
97-00		03-05-96	AB
97-02		06-04-96	AD
97-03		06-20-96	BS

SCALE: 1/2" = 1'-0"
DRAWN: S.STACHOWSK DATE: 02-20-96
PROJECT: 97777303
PLOT: 06/20/96 14:23:33 01spinub
USED ON:
AUX INFO.

FLEETWOOD RECREATIONAL VEHICLE GROUP
PAGE NO. 777-19-00019
SHEET 3 OF 3
TITLE: ELECTRICAL- 36S
12V INTERIOR

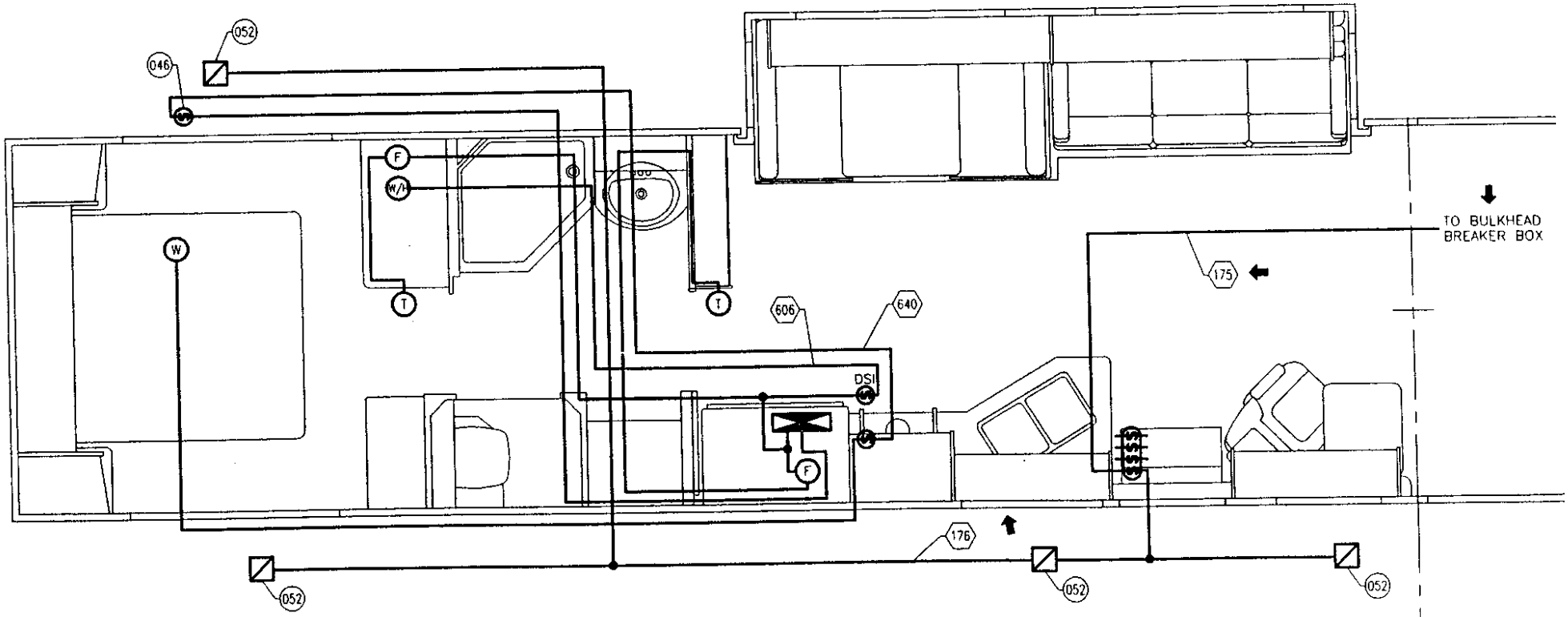

12 VOLT CIRCUITS

176	15 AMP	LIGHTS: LUGGAGE	14 GA. WHITE
606	20 AMP	APPLIANCES	12 GA. RED
640	20 AMP	WATER PUMP	12 GA. RED/BLK

D.C. RELEASE	DESCRIPTION	DATE	BY	SCALE: 1/2" = 1'-0"	USED ON:
97-00		04-10-96	RT	DRAWN: R.TORRES / DATE: 12-21-95	
97-02		06-05-96	AB	PROJECT: 97777304	
97-04	ECL #058	08-01-96	BS	PLOT: 08/01/96 10:08:18 01spinub	AUX. INFO.

FLEETWOOD RECREATIONAL VEHICLE GROUP

PAGE NO. 777-18-00019

SHEET 3 OF 4

TITLE: CEILING - 36S

DOORSIDE

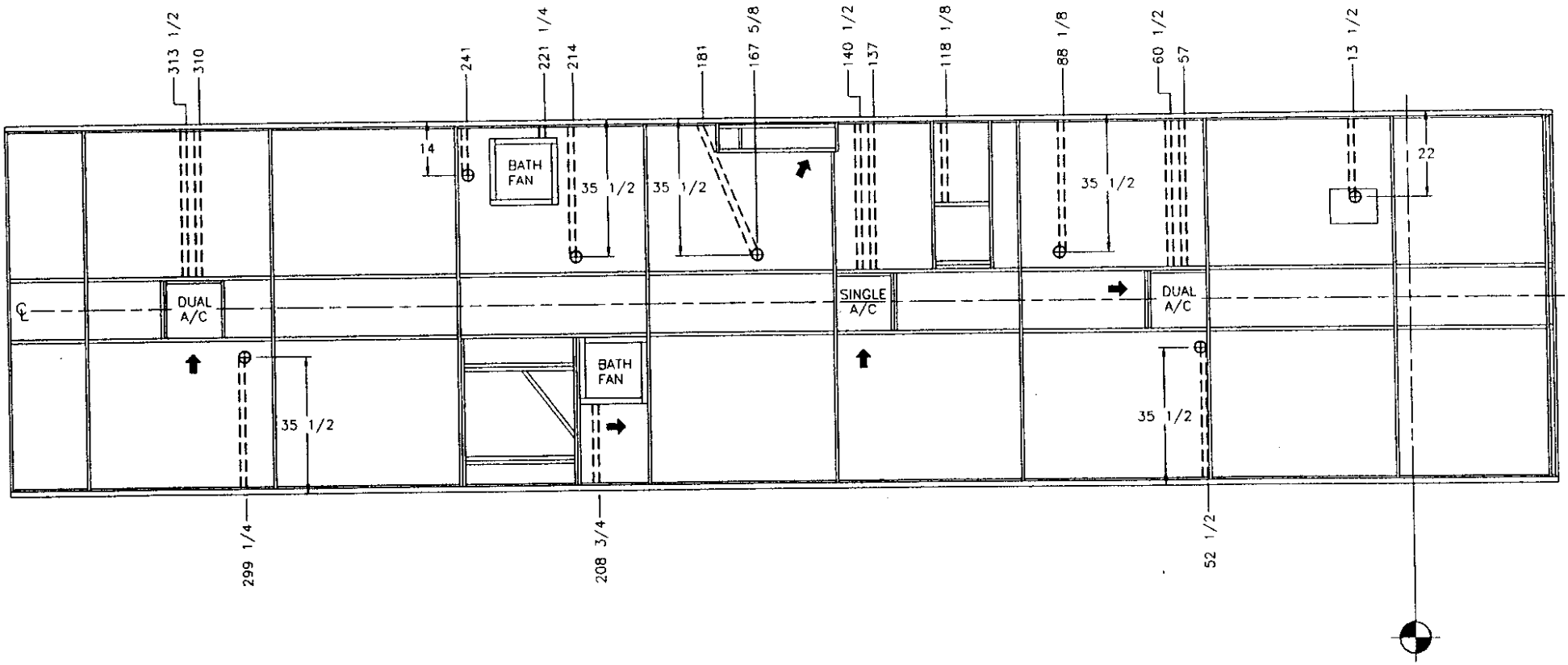

ROADSIDE

D.C. RELEASE	DESCRIPTION	DATE	BY	SCALE: 9/32" = 1'-0"	USED ON:	FLEETWOOD RECREATIONAL VEHICLE GROUP	PAGE NO 777-19-95919
97-01		05-16-96	BS	DRAWN: S.STACHOWSK DATE: 02-21-96			SHEET 1 OF 2
97-02		06-05-96	AD	PROJECT: 97777304		TITLE: WIRE HARNESS ROUTING INFO 36S	
97-04		07-23-96	BS	PLOT: 07/23/96 13:35:14 01spinub	AUX. INFO.	120 VOLT	

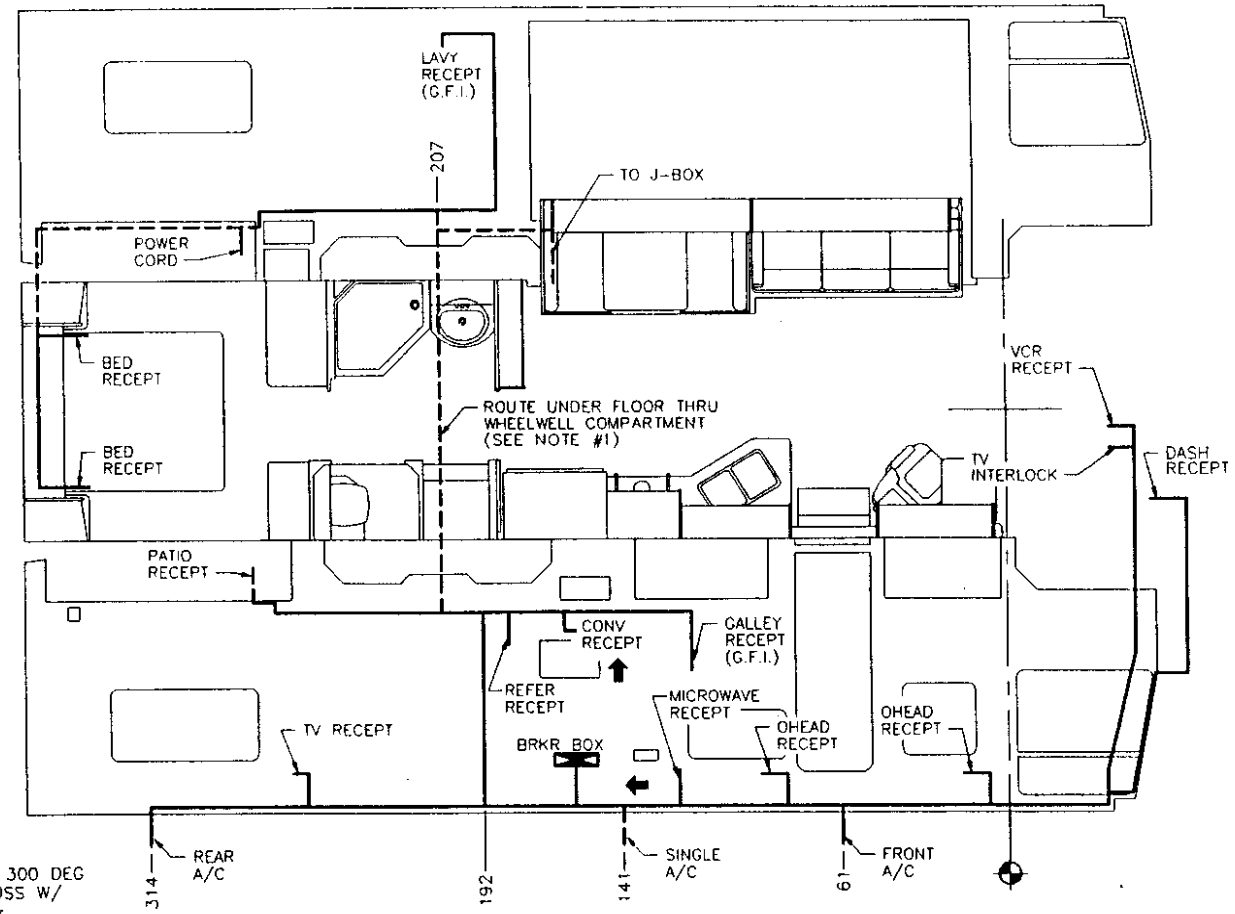

NOTES:

1. COVER WIRE W/LOOM-PLST 3/4 SPLIT 300 DEG RATING (F61-0206) & SECURE TO TRUSS W/ CLAMP- 7/8 INS LOOP (M85-0007) & SCREW- TEK #8 X 7/8 HI-LO TYPE S TEK 7/8 HI-LO TYPE S (M67-0806) @ 12" O.C.
2. ALL DIMENSIONS ARE FOR REFERENCE ONLY.
3. ONLY MAIN BRANCHES OF HARNESS SHOWN.

D.C. RELEASE	DESCRIPTION	DATE	BY	SCALE: 9/32" = 1'-0"	USED ON:	FLEETWOOD RECREATIONAL VEHICLE GROUP	PAGE NO: 777-19-95919
97-01		05-16-96	BS	DRAWN: S. LANE / DATE: 02-22-96			SHEET 2 OF 2
97-02		06-10-96	BS	PROJECT: 97777304		TITLE: WIRE HARNESS ROUTING INFO 36S	
97-04		07-16-96	BS	PLOT: 07/16/96 11:39:26 01spinub	AUX. INFO.	12 VOLT	

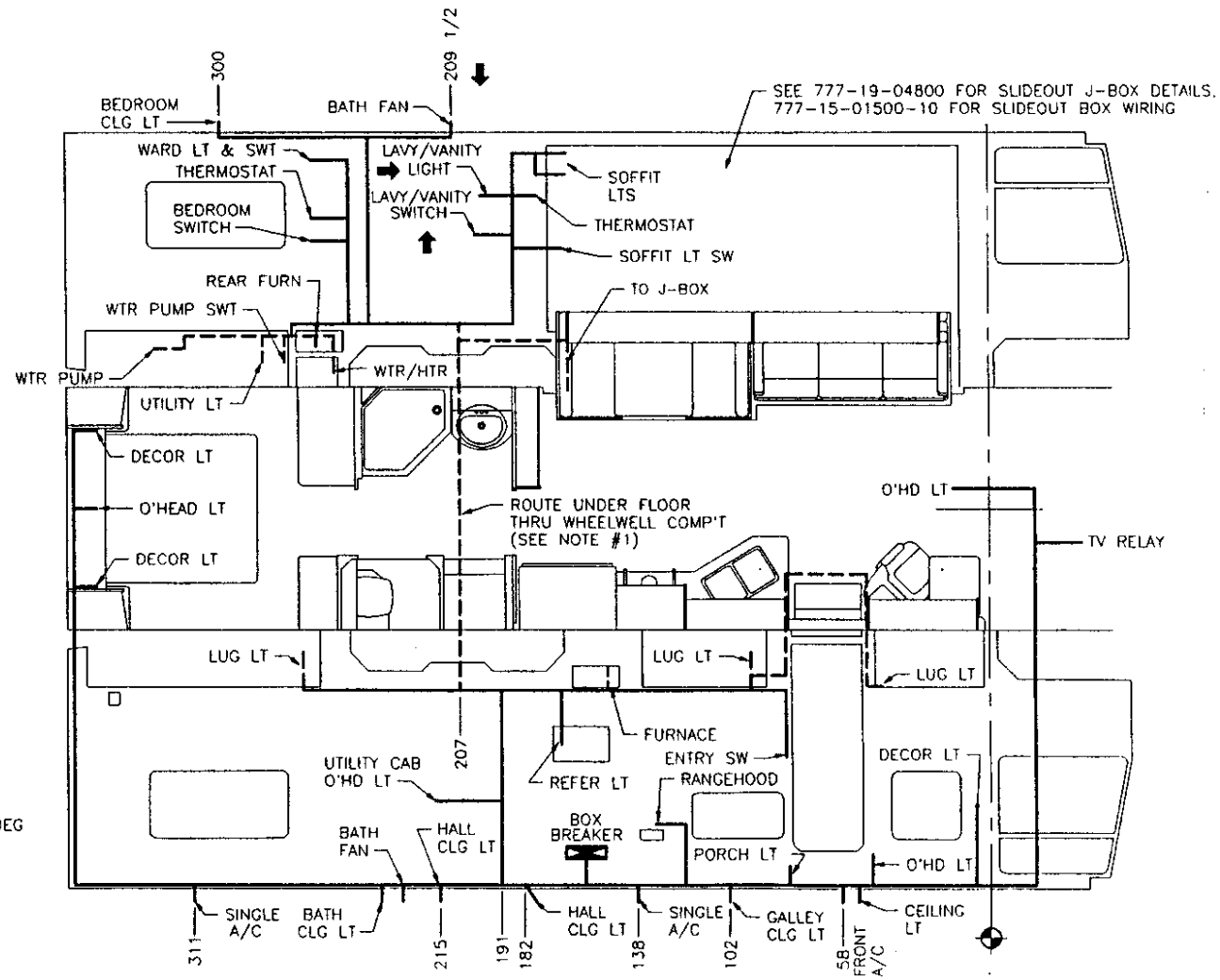

NOTES:

1. COVER WIRE W/ LOOM-PLST 3/4 SPLIT 300 DEG RATING (F61-0206) & SECURE TO TRUSS W/ CLAMP- 7/8 INS LOOP (M85-0007) & SCREW- TEK #8 X 7/8 IH-LO TYPE S TEK 7/8 HI-LO TYPE S (M67-0806) @ 12" O.C.
2. ALL DIMENSIONS ARE FOR REFERENCE ONLY.
3. ONLY MAIN BRANCHES OF HARNESS SHOWN.

D.C. RELEASE	DESCRIPTION	DATE	BY	SCALE: 1/2" = 1'-0"	USED ON:	FLEETWOOD RECREATIONAL VEHICLE GROUP	PAGE NO. 777-19-00021
97-00		04-12-96	BS	DRAWN: S.STACHOWSK DATE: 09-18-95			SHEET 1 OF 3
97-01		05-16-96	BS	PROJECT: 97777302		TITLE: ELECTRICAL- 35U	
97-02		06-04-96	BS	PLOT: 06/04/96 15:13:24 01spinub	AUX INFO	120V INTERIOR	

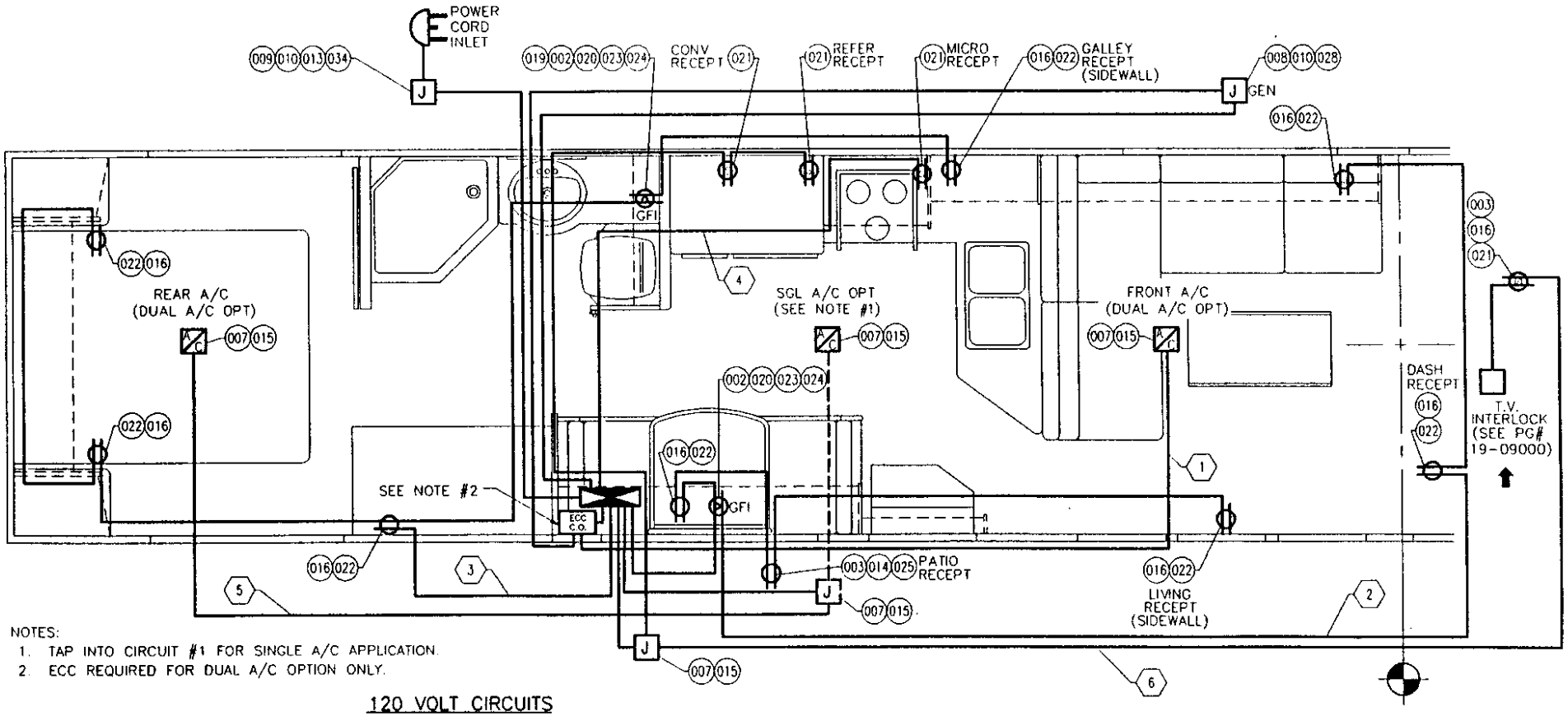

NOTES:
1. TAP INTO CIRCUIT #1 FOR SINGLE A/C APPLICATION.
2. ECC REQUIRED FOR DUAL A/C OPTION ONLY.

120 VOLT CIRCUITS

1	20 AMP	A/C ECC CHANGEOVER	12-2 W/GROUND	4	20 AMP	MICROWAVE	12-2 W/GROUND
2	20 AMP	GENERAL PURPOSE	12-2 W/GROUND	5	20 AMP	A/C	12-2 W/GROUND
3	15 AMP	GENERAL PURPOSE	14-2 W/GROUND	6	20 AMP	APPLIANCE	12-2 W/GROUND

D.C. RELEASE	DESCRIPTION	DATE	BY	SCALE: 1/2" = 1'-0"	USED ON:	FLEETWOOD RECREATIONAL VEHICLE GROUP	PAGE NO. 777-19-00021
97-00		03-22-96	RM	DRAWN: S. LANE / DATE: 09-19-95			SHEET 2 OF 3
97-02		06-05-96	AD	PROJECT: 97777303		TITLE: ELECTRICAL- 35U	
97-03		06-20-96	BS	PLOT: 06/20/96 14:25:56 01spinub	AUX. INFO.	12V INTERIOR	

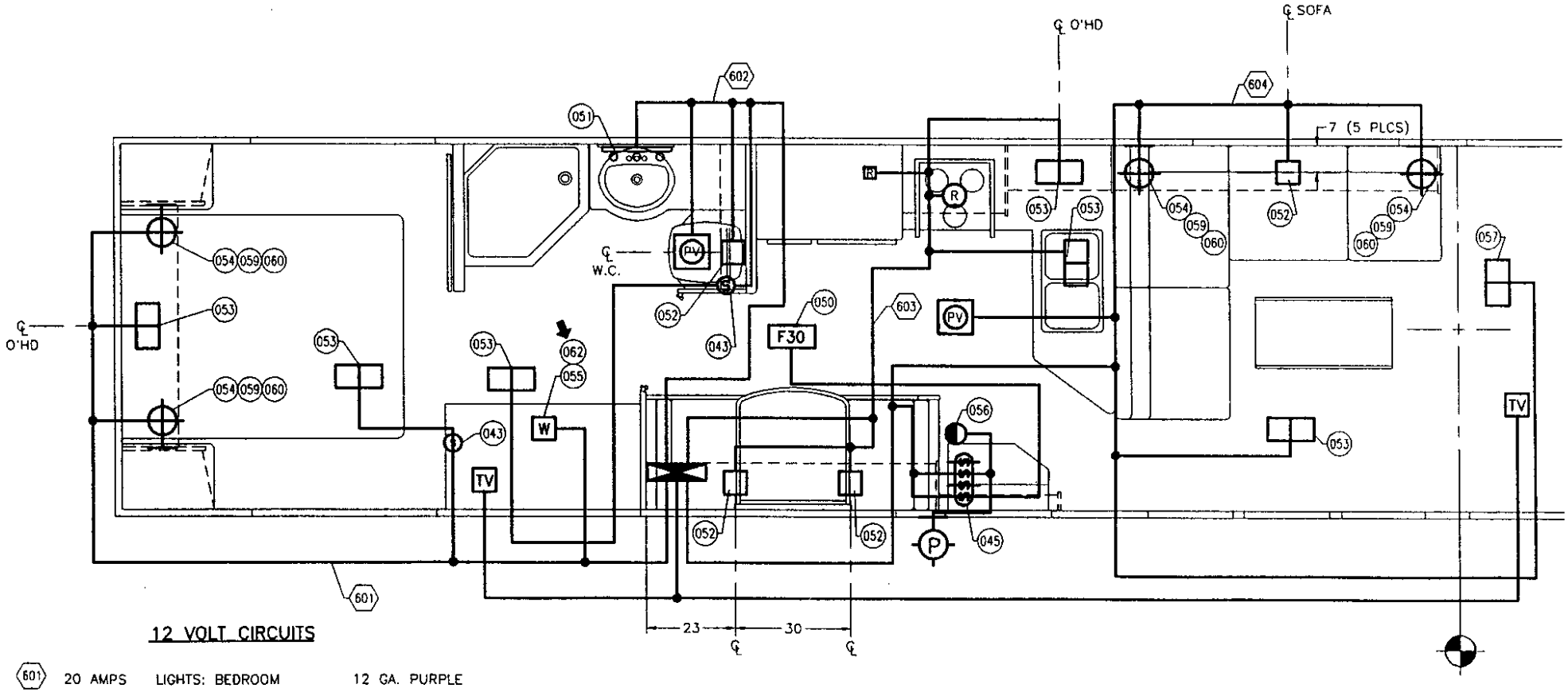

12 VOLT CIRCUITS

601	20 AMPS	LIGHTS: BEDROOM	12 GA. PURPLE
602	20 AMPS	LIGHTS: BATH	12 GA. GREEN
603	20 AMPS	LIGHTS: GALLEY	12 GA. BROWN
604	20 AMPS	LIGHTS: LIVING AREA	12 GA. YELLOW
650	20 AMPS	OPTIONAL TV	12 GA. ORANGE

D.C. RELEASE	DESCRIPTION	DATE	BY	SCALE 1/2" = 1'-0"	USED ON	FLEETWOOD RECREATIONAL VEHICLE GROUP	PAGE NO. 777-19-00021
97-00		03-27-96	DM	DRAWN S. LANE / DATE 09-20-95			SHEET 3 OF 3
97-02		06-04-96	AD	PROJECT: 97777303		TITLE: ELECTRICAL- 35U	
97-03		06-20-96	BS	PLOT: 06/20/96 14:33:16 01spinub	AUX. INFO.	12V INTERIOR	

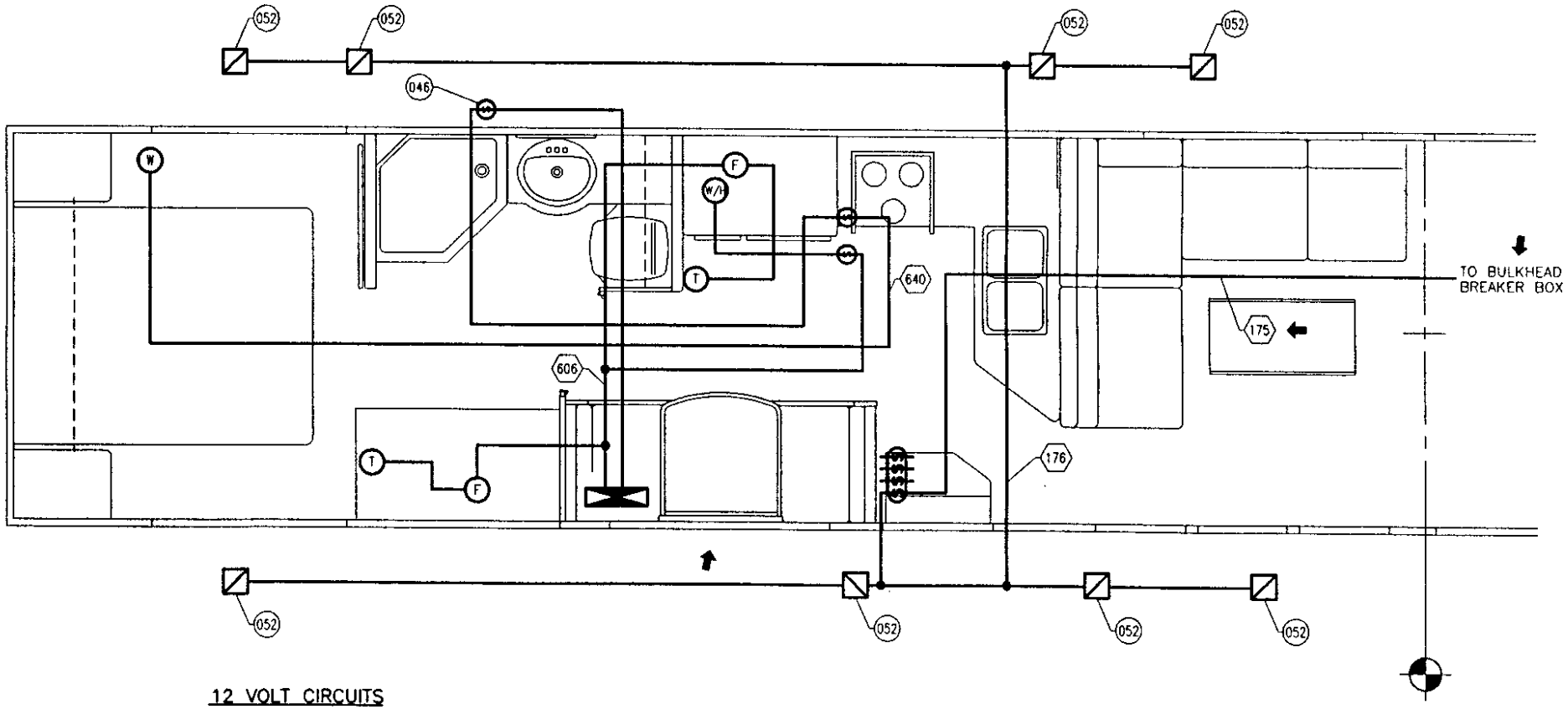

12 VOLT CIRCUITS

176	15 AMP	LIGHTS: LUGGAGE	14 GA. WHITE
606	20 AMP	APPLIANCES	12 GA. RED
640	20 AMP	WATER PUMP	12 GA. RED/BLK

D.C. RELEASE	DESCRIPTION	DATE	BY	SCALE: 1/2" = 1'-0"	USED ON:	FLEETWOOD RECREATIONAL VEHICLE GROUP	PAGE NO: 777-18-00021
97-00		04-08-96	JN	DRAWN: A.BAUTISTA DATE: 08-21-95			SHEET 3 OF 4
97-02		06-05-96	AB	PROJECT: 97777304		TITLE: CEILING - 35U	
97-04		08-01-96	RT	PLOT: 08/01/96 11:39:09 01torrer	AUX INFO		

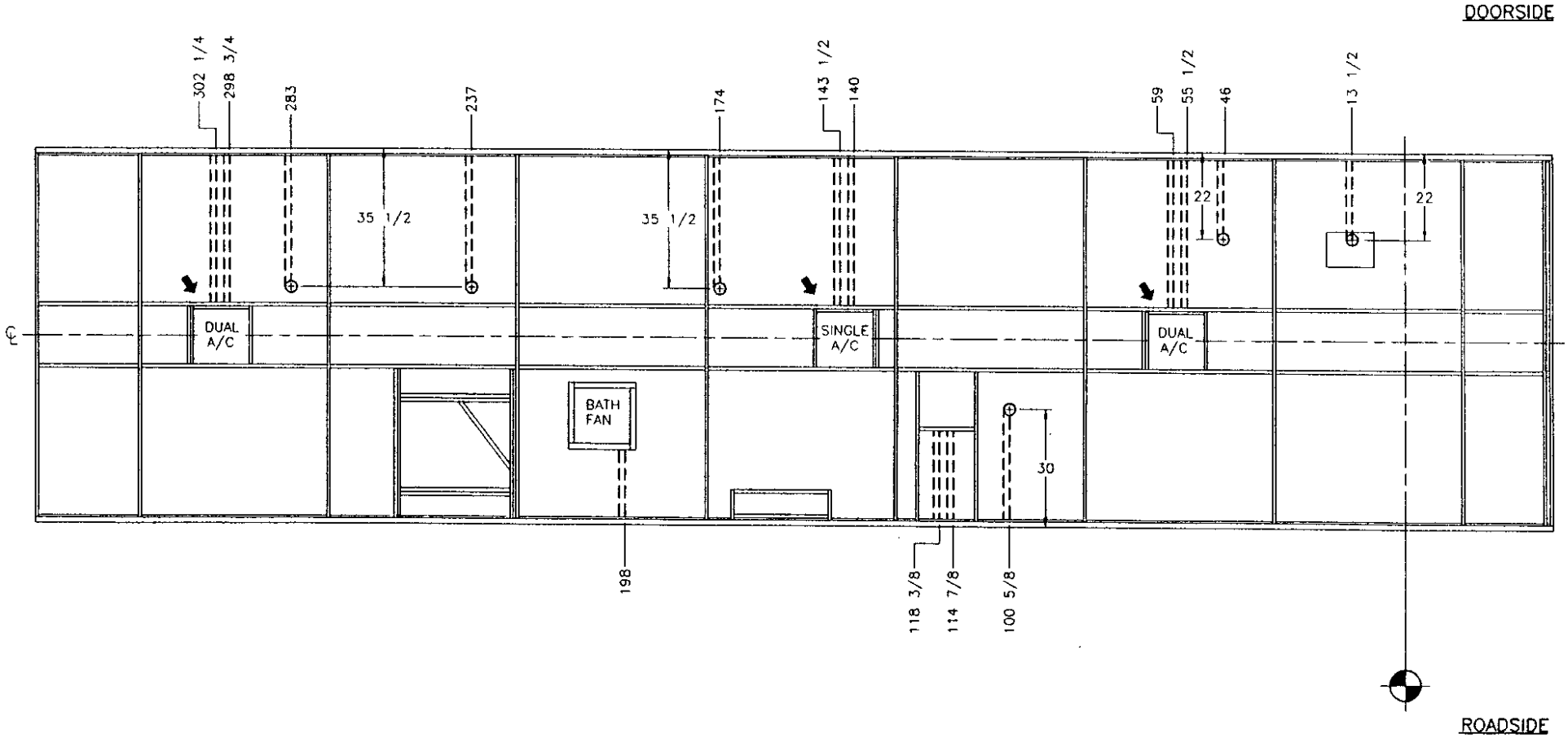

D.C. RELEASE	DESCRIPTION	DATE	BY	SCALE: 5/16" = 1'-0"	USED ON:	FLEETWOOD RECREATIONAL VEHICLE GROUP	PAGE NO. 777-19-95921
				DRAWN: S.STACHOWSK DATE: 09-20-95			SHEET 1 OF 2
97-00		03-27-96	DM	PROJECT: 97777301		TITLE: WIRE HARNESS ROUTING INFO 35U	
97-01		05-30-96	AB	PLOT: 05/30/96 09:26:40 01bautia	AUX. INFO.	120 VOLT	

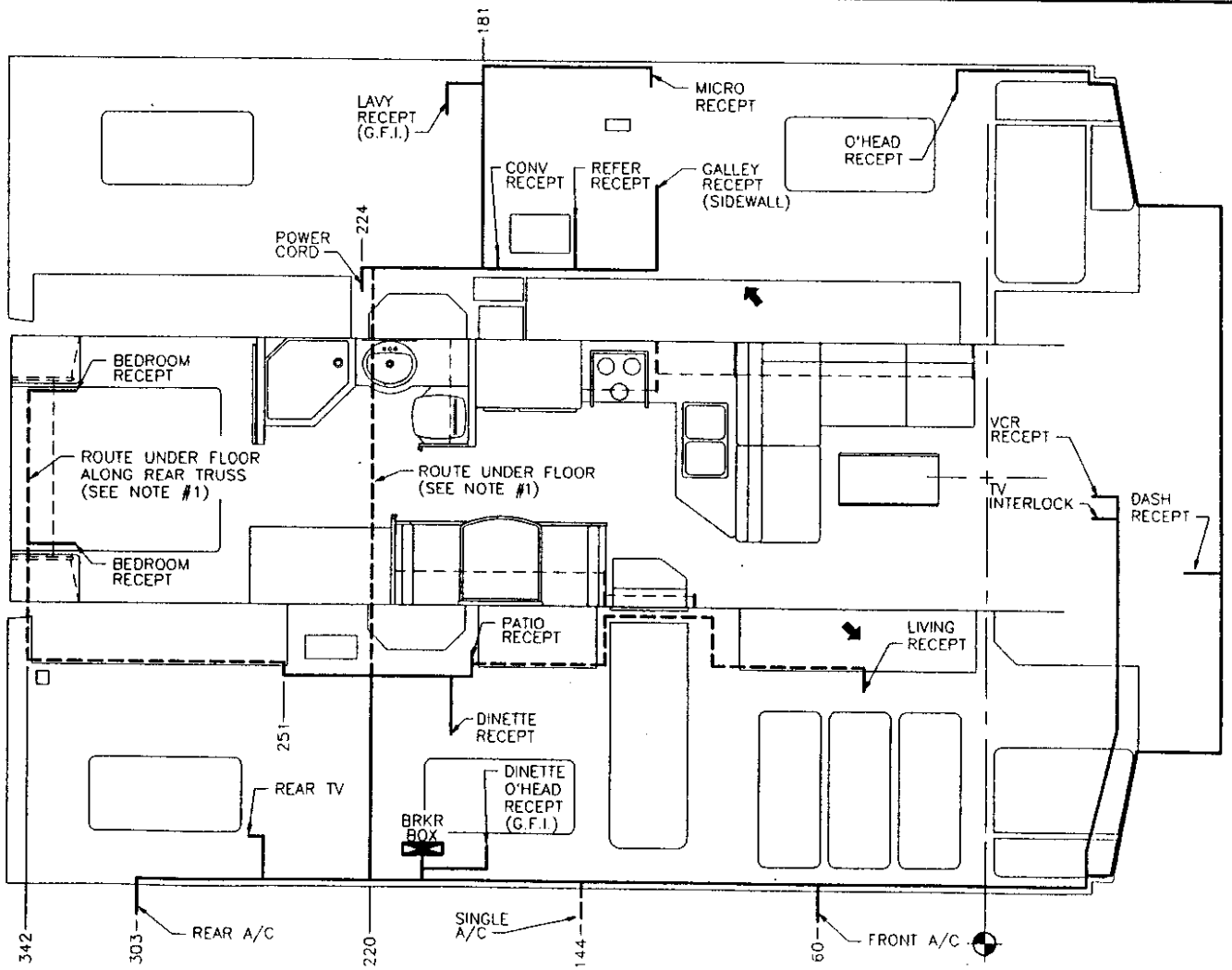

NOTES:

1. COVER WIRE W/ LOOM-PLST 3/4 SPLIT 300 DEG RATING (F61-0206) & SECURE TO TRUSS W/ CLAMP- 7/8 INS LOOP (M85-0007) & SCREW- TEK #8 X 7/8 IH-LO TYPE S TEK 7/8 HI-LO TYPE S (M67-0806) @ 12" O.C.
2. ALL DIMENSIONS ARE FOR REFERENCE ONLY.
3. ONLY MAIN BRANCHES OF HARNESS SHOWN.

D.C. RELEASE	DESCRIPTION	DATE	BY	SCALE 5/16" = 1'-0"	REF.	FLEETWOOD RECREATIONAL VEHICLE GROUP	PAGE NO. 777-19-95921
				DRAWN S. LANE / DATE 09-20-95			SHEET 2 OF 2
97-00		03-27-95	DM	PROJECT 97777302		TITLE: WIRE HARNESS ROUTING INFO 35U	
97-02		06-04-96	AD	PLOT: 06/04/96 16:04:32 01deleoa	AUX INFO	12 VOLT	

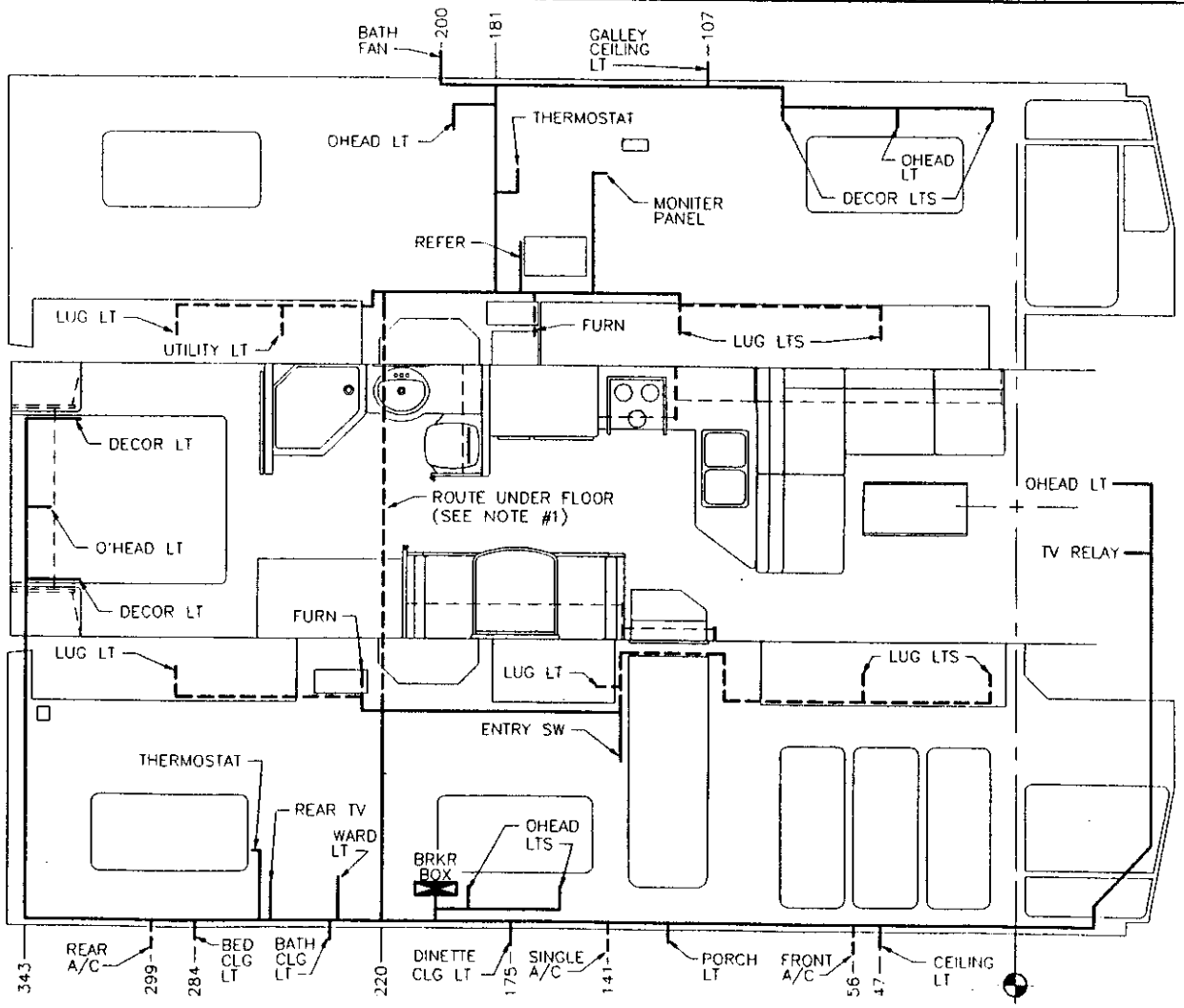

NOTES:

1. COVER WIRE W/ LOOM-PLST 3/4 SPLIT 300 DEG RATING (F61-0206) & SECURE TO TRUSS W/ CLAMP- 7/8 INS LOOP (M85-0007) & SCREW- TEK #8 X 7/8 IH-LO TYPE S TEK 7/8 HI-LO TYPE S (M67-0806) @ 12" O.C.
2. ALL DIMENSIONS ARE FOR REFERENCE ONLY.
3. ONLY MAIN BRANCHES OF HARNESS SHOWN.

D.C. RELEASE	DESCRIPTION	DATE	BY	SCALE 4" = 1'-0"	USED ON	FLEETWOOD RECREATIONAL VEHICLE GROUP	PAGE NO 777-19-00500
				DRAWN S. LANE / DATE 08-21-95			SHEET 1 OF 4
				PROJECT 97777300		TITLE ELECTRICAL PANEL BOARD BASIC	
97-00		02-29-96	SL	PLOT 02/29/96 09:32:04 01lones	AUX INFO		

NOTES:

1. POWER CENTER TO BE SUPPLIED WITHOUT BREAKERS.
2. TO BE ADDED AT PLANT:
   - (1) 30 AMP MAIN BREAKER
   - (1) 20 AMP BRANCH CIRCUIT (AIR CONDITIONERS OPTIONS ONLY)
   - (1) 20 AMP BRANCH CIRCUIT (COFFEEMAKER/RECEPTS)
   - (1) 15 AMP BRANCH CIRCUIT (GENERAL PURPOSE RECEPTS)
   - (1) 20 AMP BRANCH CIRCUIT (MICROWAVE)
   - (1) 20 AMP BRANCH CIRCUIT (ECC CHANGEOVER OPTION ONLY)
   - (1) 20 AMP BRANCH CIRCUIT (APPLIANCE)
3. TYPICAL WIRING SHOWN- USE KNOCKOUTS MOST CONVENIENT FOR ENTERING BREAKER BOX.
4. IF KNOCKOUT IS USED @ 12V WIRING- USE (1) CLAMP AND (1) KNOCKOUT FOR ENTERING FUSE BOX.
5. LOW-VOLTAGE WIRES (CONDUCTORS) SHALL BE PROTECTED AGAINST PHYSICAL DAMAGE AND SHALL BE MADE SECURE. WHERE INSULATED CONDUCTORS ARE CLAMPED TO THE STRUCTURE, THE CONDUCTOR INSULATION SHALL BE SUPPLEMENTED BY AN ADDITIONAL WRAP OR LAYER OF EQUIVALENT MATERIAL (AUTO LOOM). JACKETED CABLES NEED NOT BE SO PROTECTED. WIRING SHALL BE ROUTED AWAY FROM SHARP EDGES, MOVING PARTS, OR HEAT SOURCES.
6. THE INSULATION OF UNDER CHASSIS WIRE SHALL BE MOISTURE AND HEAT RESISTANT, TYPE THW OR EQUIVALENT.
7. 12 VOLT WIRES SHALL BE STRANDED COPPER WITH A MINIMUM OF 30 MILS THERMO PLASTIC INSULATION OR EQUAL.
8. A PROTECTIVE COVER SHOULD BE USED DURING CONSTRUCTION OF INTERIOR TO PREVENT DUST OR LOOSE OBJECTS FROM DAMAGING CONVERTER.

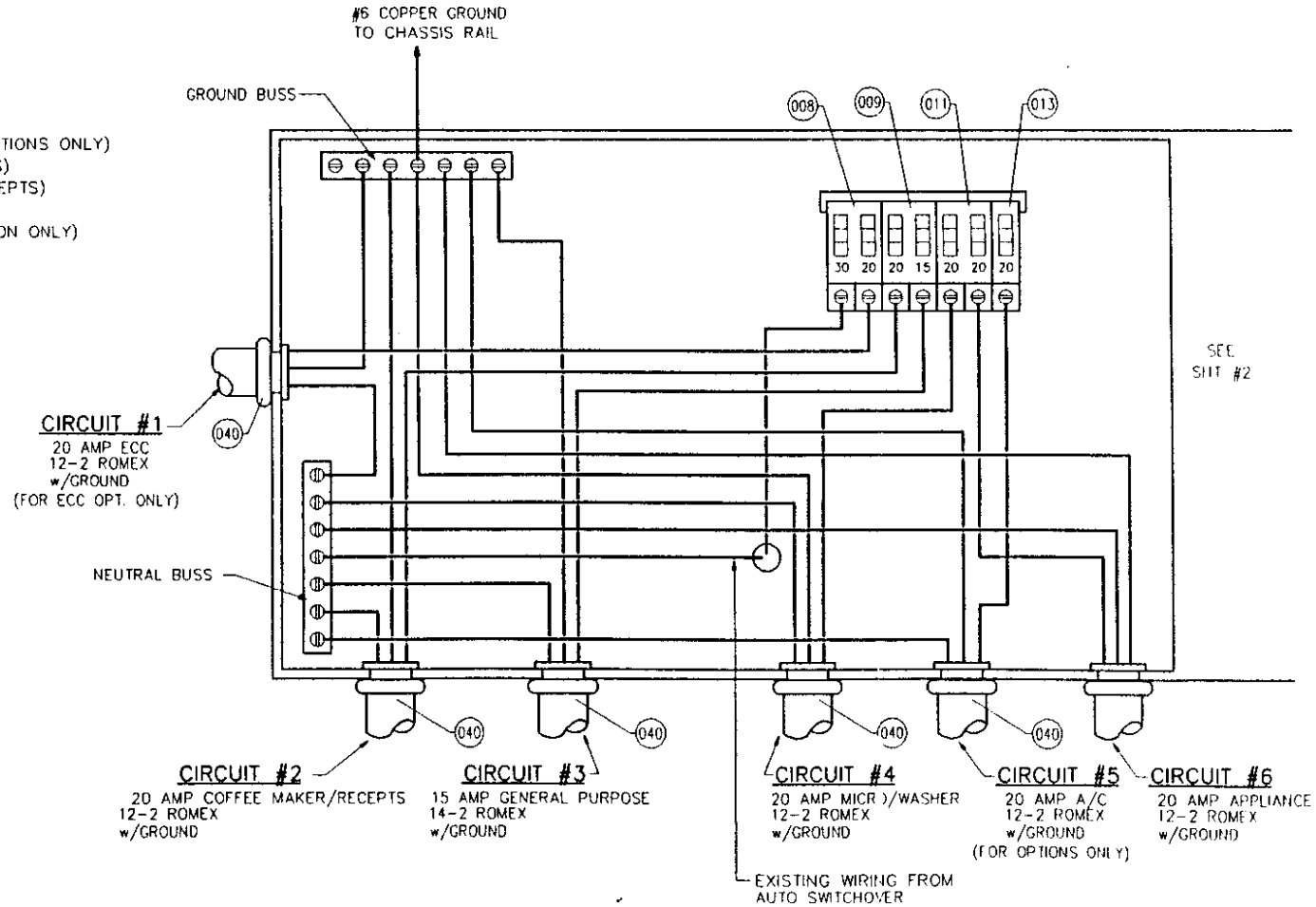

110 VOLT CONNECTIONS

D.C. RELEASE	DESCRIPTION	DATE	BY	SCALE: 4" = 1'-0"	USED ON:	FLEETWOOD RECREATIONAL VEHICLE GROUP	PAGE NO. 777-19-00500
				DRAWN: S. LANE / DATE: 08-22-95			SHEET 2 OF 4
				PROJECT: 97777300		TITLE: ELECTRICAL PANEL BOARD BASIC	
97-00		02-29-96	SL	PLOT: 02/29/96 08:29:03 01lanes	AUX. INFO		

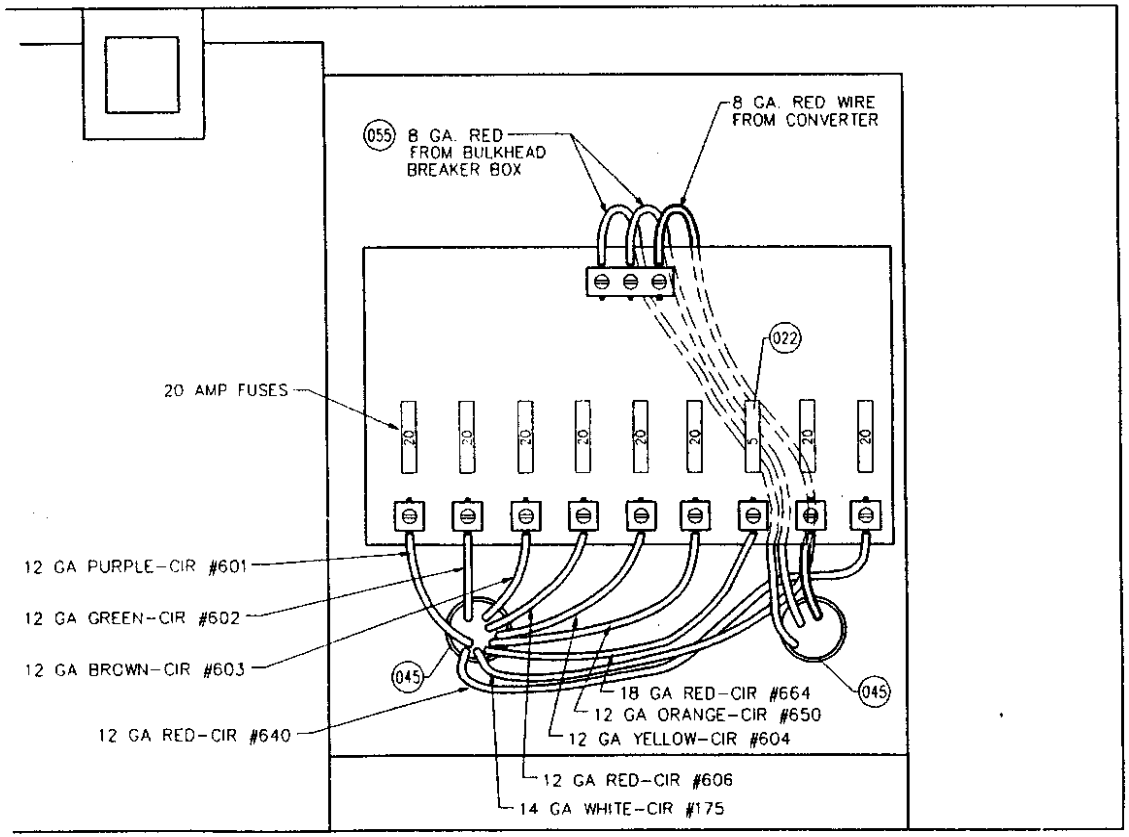

12 VOLT CONNECTIONS

D.C. RELEASE	DESCRIPTION	DATE	BY	SCALE 5/8" = 1'-0"	USED ON	FLEETWOOD RECREATIONAL VEHICLE GROUP	PAGE NO. 777-19-09000
				DRAWN: S.STACHOWSK DATE: 08-22-95			SHEET 1 OF 2
97-00		03-27-96	BS	PROJECT: 97777301		TITLE: TV/VCR WIRING	
97-01		05-22-96	AB	PLOT: 05/22/96 14:04:18 01bautia	AUX INFO		

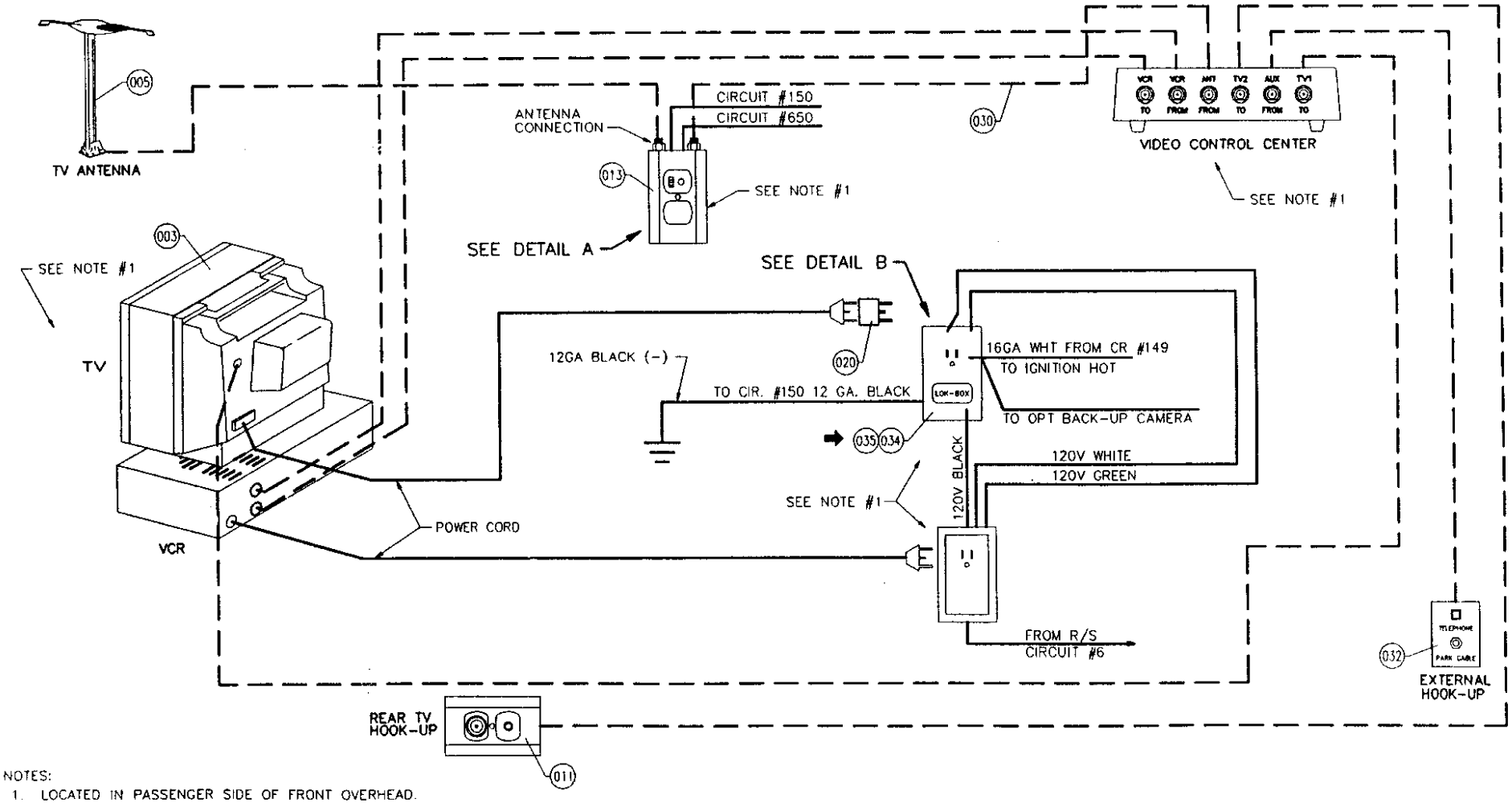

NOTES:
1. LOCATED IN PASSENGER SIDE OF FRONT OVERHEAD.

D.C. RELEASE	DESCRIPTION	DATE	BY	SCALE 5/8" = 1'-0"	USED ON.	FLEETWOOD RECREATIONAL VEHICLE GROUP	PAGE NO. 777-19-09000
				DRAWN: S.STACHOWSK DATE 08-22-95			SHEET 1 OF 2
				PROJECT: 97777300		TITLE: TV/VCR WIRING	
97-00		03-27-96	BS	PLOT: 03/27/96 08:07:14 01spinub	AUX. INFO.		

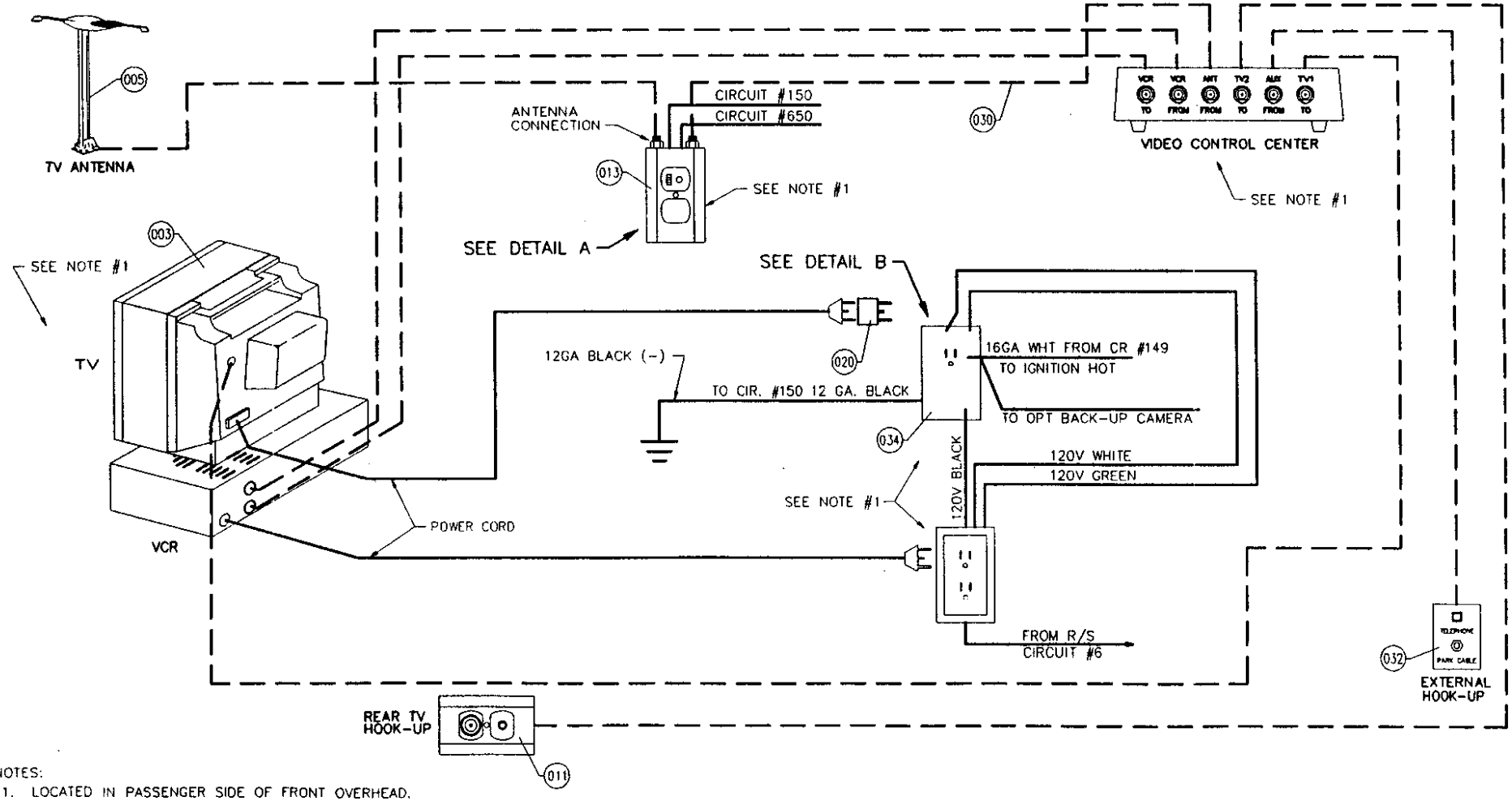

NOTES:
1. LOCATED IN PASSENGER SIDE OF FRONT OVERHEAD.

D.C. RELEASE	DESCRIPTION	DATE	BY	SCALE: 12" = 1'-0"	USED ON:	FLEETWOOD RECREATIONAL VEHICLE GROUP	PAGE NO. 777-19-90950
				DRAWN: O.CARLSON / DATE: 05-12-95			SHEET 1 OF 1
				PROJECT: 97777300		TITLE: ELECTRICAL SYMBOLS INFO	
97-00		03-27-96	DM	PLOT: 03/27/96 17:54:32 01milled	AUX. INFO.		

SYMBOL	DESCRIPTION	SYMBOL	DESCRIPTION	SYMBOL	DESCRIPTION	SYMBOL	DESCRIPTION
	2 BULB INCANDESCENT LIGHT RECESSED	F8	8 WATT FLOURESCENT LIGHT	S	SWITCH - SINGLE		OUTSIDE TELEPHONE HOOK-UP
	1 BULB INCANDESCENT LIGHT RECESSED	F15	15 WATT FLOURESCENT LIGHT	SS	SWITCH - DOUBLE		INSIDE TELEPHONE HOOK-UP
	1 BULB INCANDESCENT LIGHT (LUGGAGE COMPARTMENT)	PV	POWER ROOF VENT W/O LIGHT	SSS	SWITCH - TRIPLE	CTV	PARK CABLE HOOK-UP (EXTERIOR)
W	1 BULB WARDROBE LIGHT	PV	POWER ROOF VENT WITH LIGHT	SSSS	SWITCH - QUAD	TV	TELEVISION JACK
	READING LIGHT - INCANDESCENT		WATER PUMP CONTROLLER UNIT	SSSSS	SWITCH - QUINT		
R	REFER LIGHT	F/C	FOOD CENTER		RECEPT - SINGLE		VIDEO CONTROL CENTER
	FLOOR LIGHT / COURTESY LIGHT	F	FURNACE		RECEPT - DUPLEX		
	VALANCE LIGHT	G/B	GRAB BAR	GFI	RECEPT - G.F.I.		
	VANITY LIGHT	IG	IGNITION/REFER	S	SPLICE CONNECTOR		
	HALF-SHADED LIGHT	R	RANGEHOOD				
	DECOR LIGHT	T	THERMOSTAT	S	APPLIANCE / AIR CONDITIONER SELECTOR SWITCH		
		W/H	WATER HEATER	J	JUNCTION BOX		
	EXTERIOR LIGHT	W	WATER PUMP				SHORE LINE POWER CORD
P	PORCH LIGHT	L/D	LIQUID PROPANE LEAK DETECTOR		STANDARD AIR CONDITIONER LOCATION		BREAKER BOX

NOTES:

1. ALL 12 VOLT LIGHTS AND MOTORS SHALL BE GROUNDED TO AUXILIARY BATTERY.
2. 12 VOLT AND 120 VOLT WIRES TO BE PHYSICALLY SEPERATED BY LOOM WHERE THEY CROSS EACH OTHER.
3. STAPLE ROMEX WIRES WITHIN 6" OF JUNCTION BOX.
4. WRAP 120 VOLT WIRE CONNECTORS WITH ELECTRICAL TAPE.
5. ROUTE ALL 12 VOLT CIRCUIT GROUNDS TO SINGLE GROUNDING BLOCK AT BREAKER BOX GROUND. GROUND BUSS TO (-) NEGATIVE POST ON AUXILIARY BATTERY WITH #6 WHITE GROUND WIRE.

D.C. RELEASE	DESCRIPTION	DATE	BY	SCALE: 9" = 1'-0"	USED ON:	FLEETWOOD RECREATIONAL VEHICLE GROUP	PAGE NO. 777-19-90951
				DRAWN: D.CARLSON DATE 05-12-95			SHEET 1 OF 6
				PROJECT: 97777300		TITLE: JUNCTION BOX WIRING INFO	
97-00		03-27-96	DM	PLOT: 03/27/96 17:55:07 01milled	AUX. INFO.		

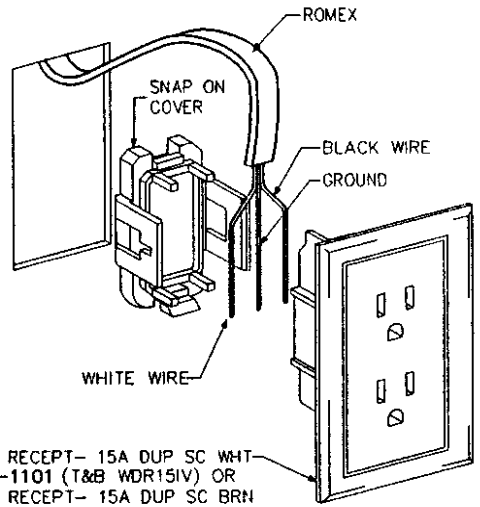

120V RECEPT- 15A DUP SC WHT
F21-1101 (T&B WDR15IV) OR
120V RECEPT- 15A DUP SC BRN
F21-1111 (T&B WDR15BR)

END-OF-RUN RECEPT

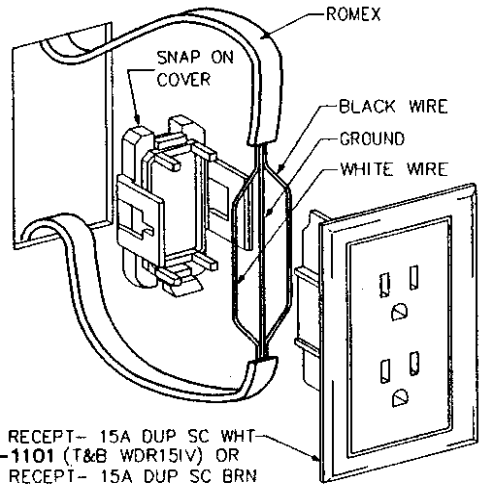

120V RECEPT- 15A DUP SC WHT
F21-1101 (T&B WDR15IV) OR
120V RECEPT- 15A DUP SC BRN
F21-1111 (T&B WDR15BR)

IN-LINE RECEPT

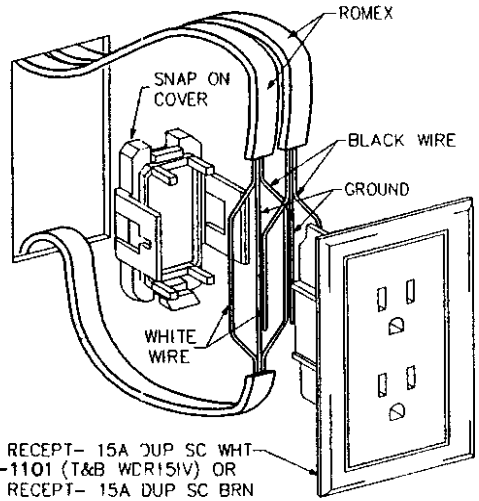

120V RECEPT- 15A DUP SC WHT
F21-1101 (T&B WDR15IV) OR
120V RECEPT- 15A DUP SC BRN
F21-1111 (T&B WDR15BR)

ONE-IN-TWO-OUT RECEPT

SELF CONTAINED DEVICES

NOTES:

1. ROMEX CABLE SHALL BE SECURED AT INTERVALS NOT TO EXCEED 52" AND WITHIN 12" FROM RECEPT OPENING.
2. ALLOW AT LEAST A 12" LOOP OF UNBROKEN CABLE OR 6" OF A CABLE END AVAILABLE FOR INSTALLATION AND SERVICE.
3. NO BEND SHALL HAVE A RADIUS OF LESS THAN FIVE TIMES THE CABLE DIAMETER.
4. IN SELF-CONTAINED RECEPTS OR J-BOXES WHERE MORE THAN ONE CABLE IS INSTALLED, EACH CABLE MUST BE INDIVIDUALLY FORCED INTO THE CONTACTS BY THE SNAP ON COVER. THE COVER MUST BE REMOVED AND RE-CLOSED FOR EACH CABLE INSTALLED.
5. SELF CONTAINED J-BOXES AND REFER RECEPTS ARE INTENDED FOR SURFACE MOUNTING AND ARE SUPPLIED WITH TWO 2 " WOOD SCREWS IN PLACE OF STANDARD SCREWS AND PAWL.

CONVENTIONAL NON-METALLIC J-BOXES AND DEVICES

NOTES:

6. ROMEX MUST BE STAPLED WITHIN 8" OF CONVENTIONAL NON-METALLIC JUNCTION BOX.
7. AT LEAST 4" OF FREE CONDUCTORS, MEASURED FROM THE FACE OF THE OUTLET BOX, SHALL BE LEFT AT EACH OUTLET BOX EXCEPT WHERE CONDUCTORS ARE INTENDED TO LOOP WITHOUT JOINTS.

D.C. RELEASE	DESCRIPTION	DATE	BY	SCALE: 6" = 1'-0"	USED ON:	FLEETWOOD RECREATIONAL VEHICLE GROUP	PAGE NO. 777-19-90951
				DRAWN: D.CARLSON DATE: 05-12-95			SHEET 2 OF 6
				PROJECT: 97777300		TITLE: JUNCTION BOX WIRING INFO	
97-00		03-27-96	DM	PLOT: 03/27/96 17:55:47 01milled	AUX INFO		

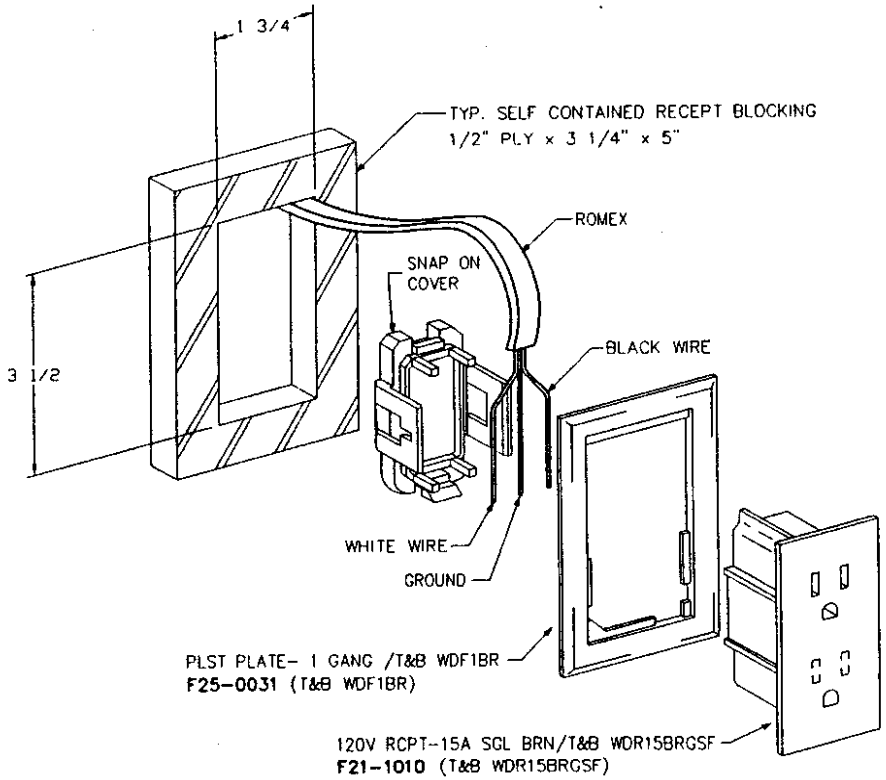

END-OF-RUN SINGLE RECEPT
(MICROWAVE)

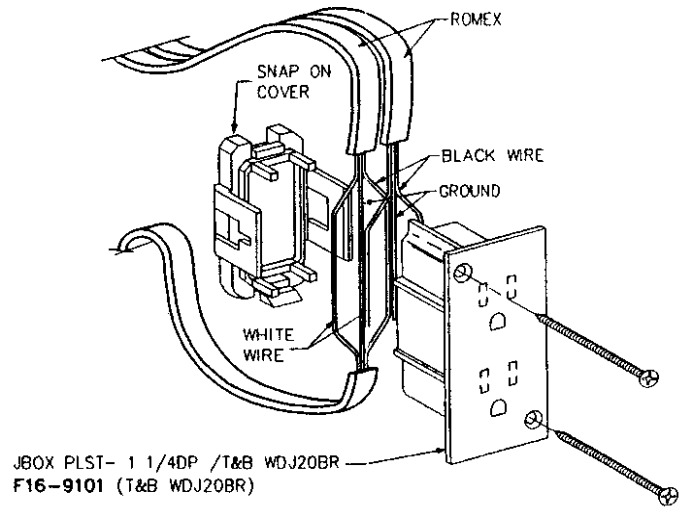

JUNCTION BOX
(SURFACE MOUNT)

D.C. RELEASE	DESCRIPTION	DATE	BY	SCALE: 6" = 1'-0"	USED ON:	FLEETWOOD RECREATIONAL VEHICLE GROUP	PAGE NO: 777-19-90951
				DRAWN: D.CARLSON / DATE: 05-12-95			SHEET 3 OF 6
				PROJECT: 97777300		TITLE: JUNCTION BOX WIRING INFO	
97-00		03-27-96	DM	PLOT: 03/27/96 17:56:18 01milled	AUX. INFO		

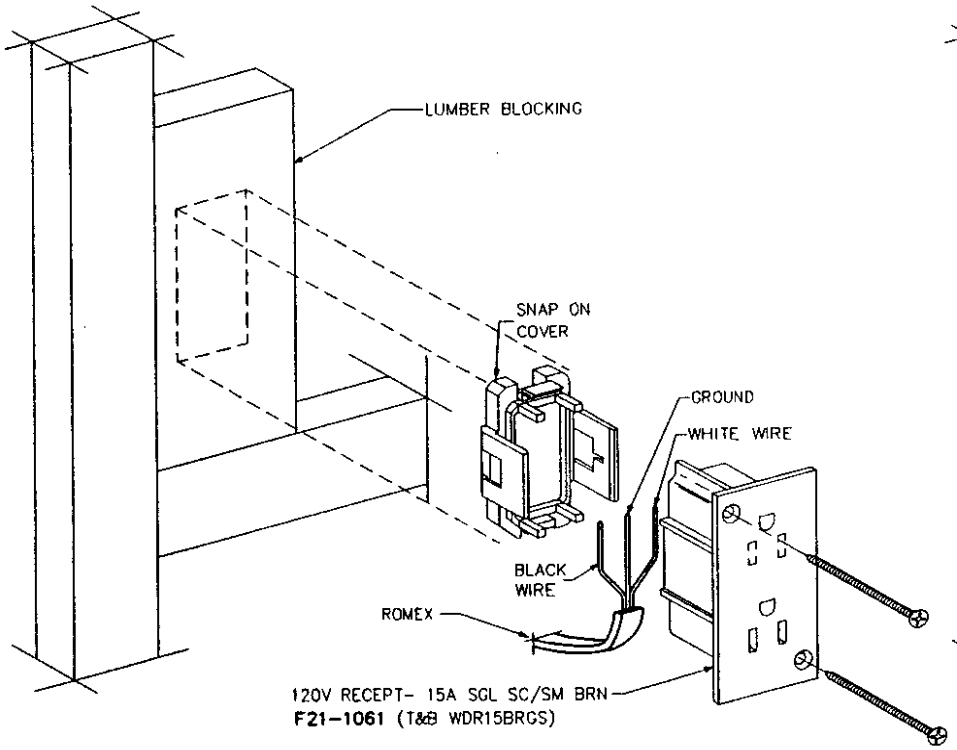

END OF RUN REFER RECEPT
(SURFACE MOUNT)

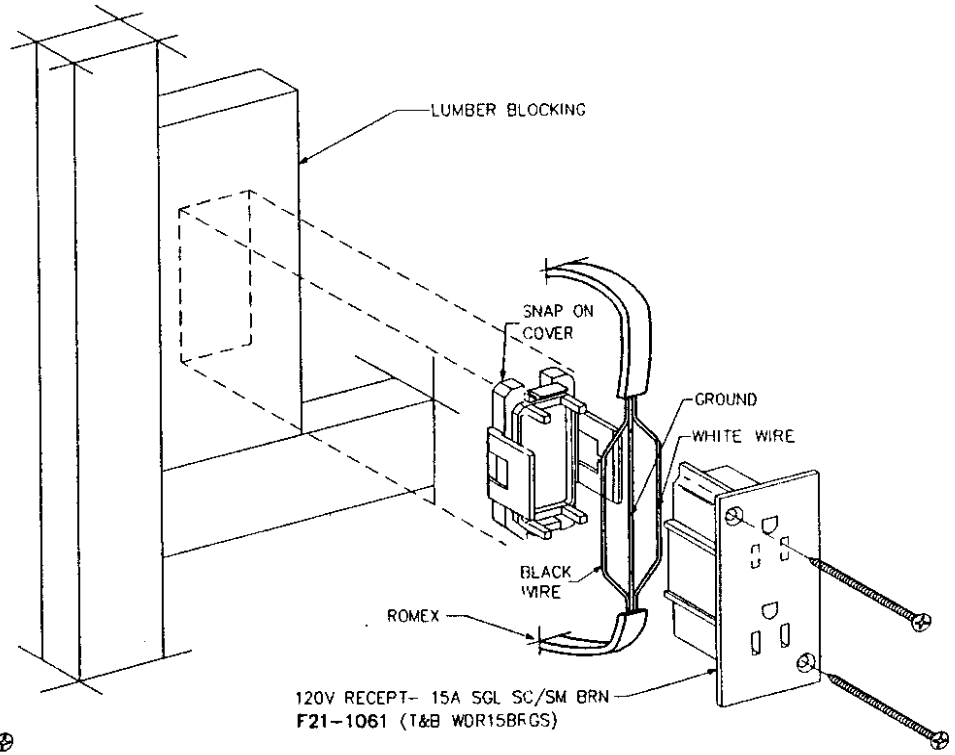

IN-LINE REFER RECEPT
(SURFACE MOUNT)

D.C. RELEASE	DESCRIPTION	DATE	BY	SCALE: 6" = 1'-0"	USED ON:	FLEETWOOD RECREATIONAL VEHICLE GROUP	PAGE NO. 777-19-90951
				DRAWN: D.CARLSON / DATE: 05-12-95			SHEET 4 OF 6
				PROJECT: 97777300		TITLE: JUNCTION BOX WIRING INFO	
97-00		03-27-96	DM	PLOT: 03/27/96 17:56:48 01milled	AUX INFO.		

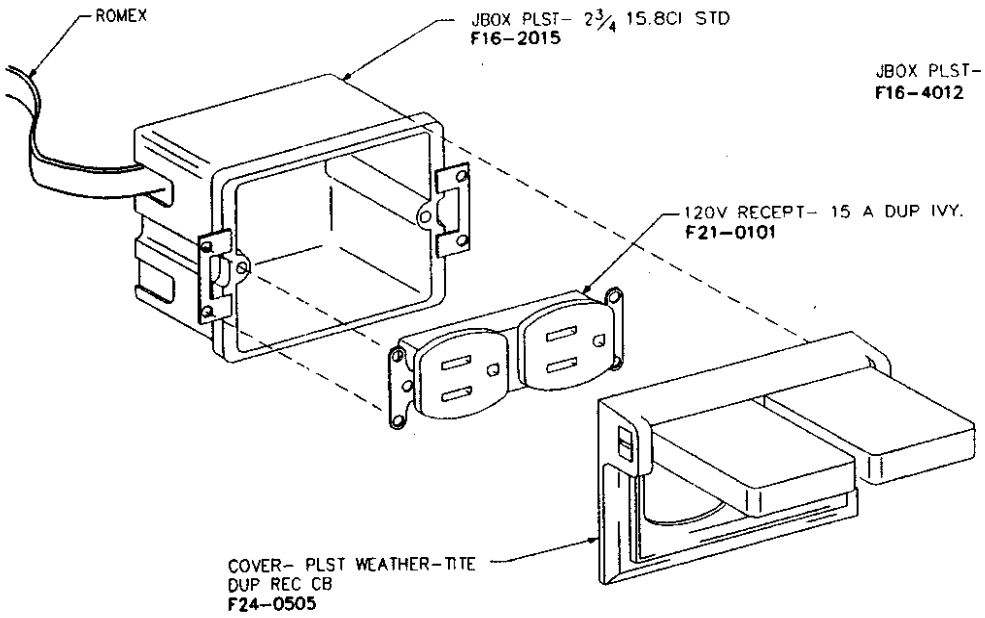

PATIO RECEPT

IN-LINE

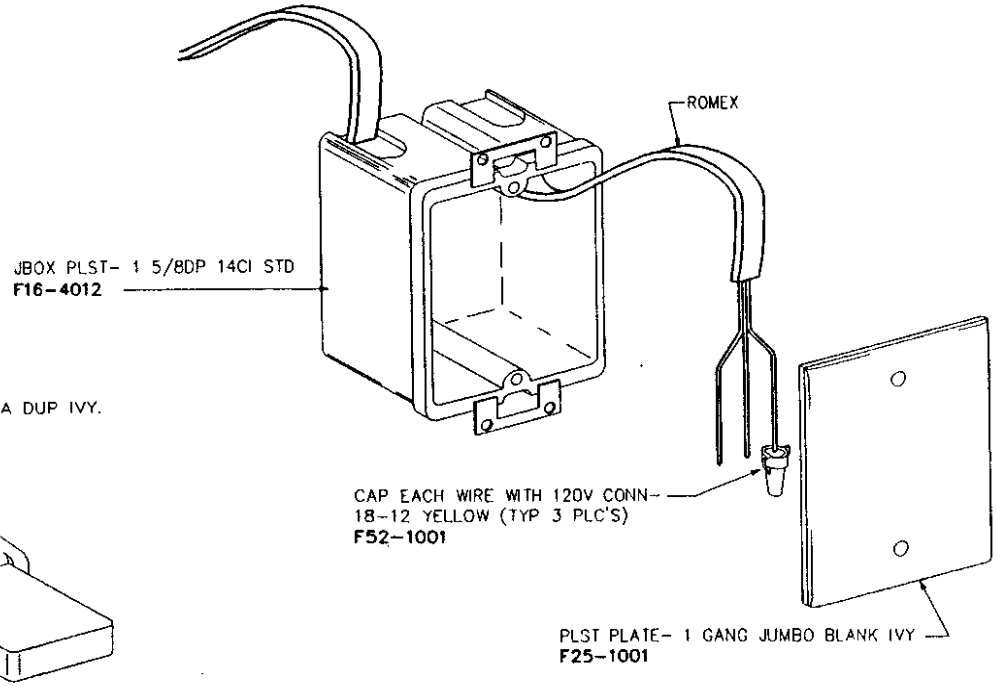

A/C JUNCTION BOX

D.C. RELEASE	DESCRIPTION	DATE	BY	SCALE: 6" = 1'-0"	USED ON:	FLEETWOOD RECREATIONAL VEHICLE GROUP	PAGE NO. 777-19-90951
				DRAWN: D.CARLSON / DATE: 05-12-95			SHEET 5 OF 6
				PROJECT: 97777300		TITLE: JUNCTION BOX WIRING INFO	
97-00		03-27-96	DM	PLOT: 03/27/96 17:57:16 01milled	AUX INFO		

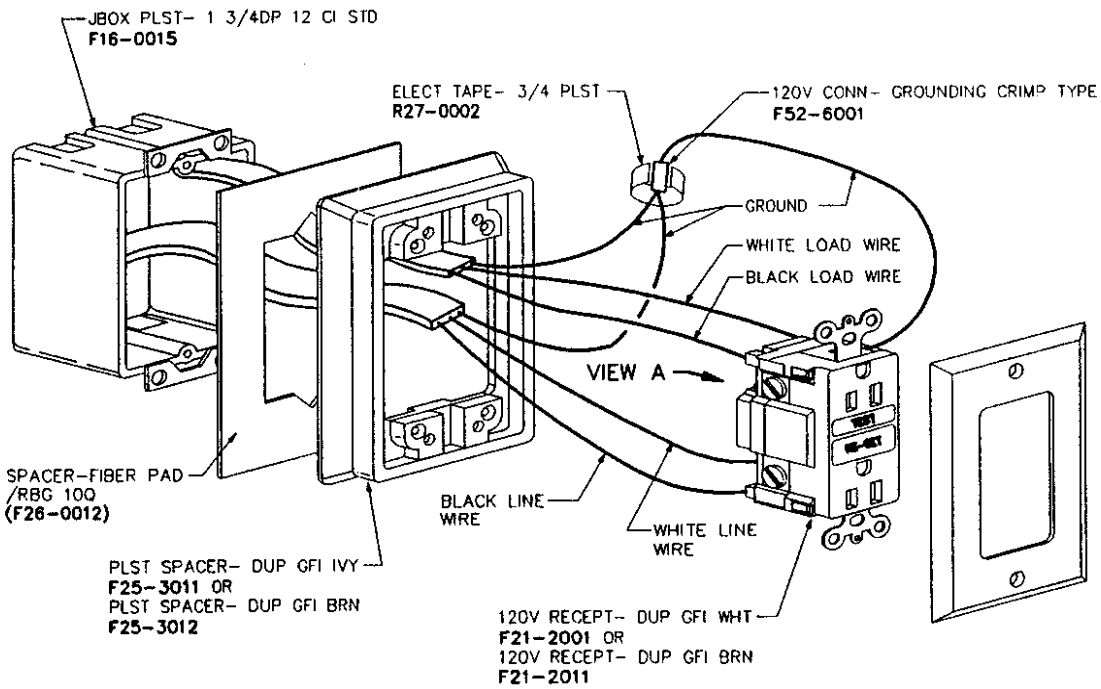

GFI RECEPTACLE

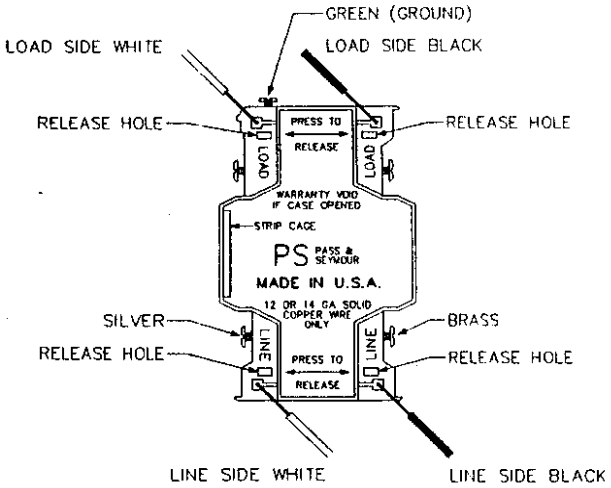

VIEW A

D.C. RELEASE	DESCRIPTION	DATE	BY	SCALE 12" = 1'-0"	USED ON	FLEETWOOD	PAGE NO. 777-19-90951
				DRAWN D CARLSON / DATE 05-12-95		RECREATIONAL VEHICLE GROUP	SHEET 6 OF 6
97-00		03-27-96	DM	PROJECT 97777304		TITLE: JUNCTION BOX WIRING INFO	
97-04	ECL #005	07-18-96	BS	PLOT 07/18/96 15:33:32 01spinub	AUX INFO		

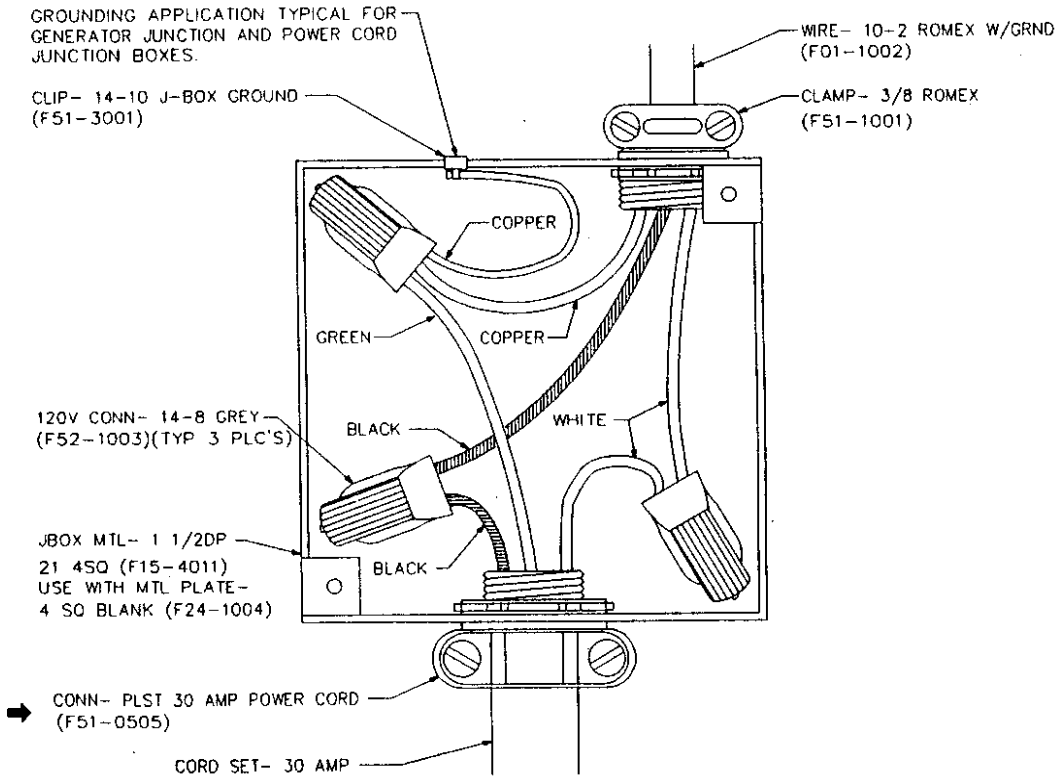

POWER CORD J-BOX

D.C. RELEASE	DESCRIPTION	DATE	BY	SCALE: 12" = 1'-0"	USED ON:	FLEETWOOD RECREATIONAL VEHICLE GROUP	PAGE NO. 777-19-90953
				DRAWN: J. PATTON / DATE: JUN-10-91			SHEET 1 OF 4
				PROJECT: 97777300		TITLE: TYPICAL 120V & 12V WIRING	
97-00		03-27-96	DM	PLOT: 03/27/96 17:58:14 01milled	AUX INFO:		

TYPICAL CLOSED END CONNECTORS

NC-2214
(F56-8000)

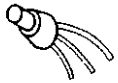

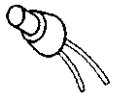

NC-1610
(F56-8100)

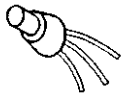

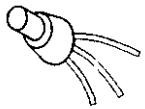

NC-8
(F56-8200)

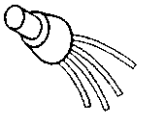

WIRE COMBINATIONS

WIRE GA.	22	20	18	16
	2			
		2		
			2	
				2
	1	1		
	1		1	
	1			1
		1	1	
		1		1
			1	1

22	20	18	16
3			
	3		
		3	
2	1		
2		1	
2			1
1	2		
	2	1	
	2		1
1		2	
	1	2	
		2	1
1			2
	1		2
1	1	1	
1	1		1
1		1	1
	1	1	1

18	16	14	12
	2		
		2	
			2
1	1		
1		1	
1			1
	1	1	
	1		1
		1	1

18	16	14	12
3			
	3		
		3	
2	1		
2		1	
1	2		
	2	1	
1		2	
	1	2	
1	1	1	

18	16	14	12
		3	
			3
2			1
1	2		
	2		1
1			2
	1		2
		1	2
1	1	1	

18	16	14	12
	4		
		4	
			4
3			1
	3	1	
	3		1
	1	3	
		3	1
1			3
	1		3
		1	3
1	1	1	1
2	2		
2		2	
2			2
	2	2	
	2		2
		2	2
2	1	1	
2	1		1
2		1	1
1	2	1	
1	2		1
	2	1	1
1	1	2	
1		2	1
	1	2	1
1	1		2
1		1	2
	1	1	2

D.C. RELEASE	DESCRIPTION	DATE	BY	SCALE: 12" = 1'-0"	USED ON:	FLEETWOOD RECREATIONAL VEHICLE GROUP	PAGE NO. 777-19-90953
				DRAWN: J. PATTON / DATE: JUN-10-91			SHEET 2 OF 4
				PROJECT: 97777300		TITLE: TYPICAL 120V & 12V WIRING	
97-00		03-27-96	DM	PLOT: 03/27/96 17:58:37 01milled	AUX. INFO.		

TYPICAL BUTT CONNECTIONS

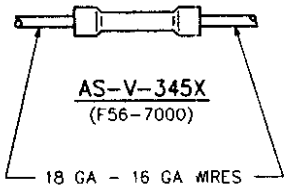

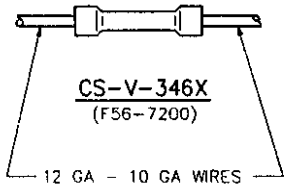

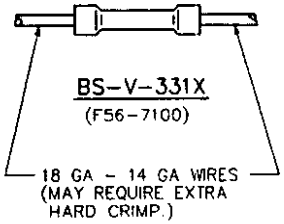

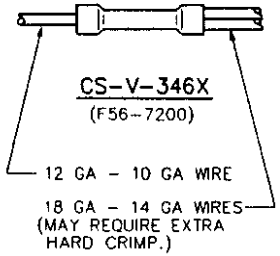

TYPICAL WIRE HARNESS SPLICE

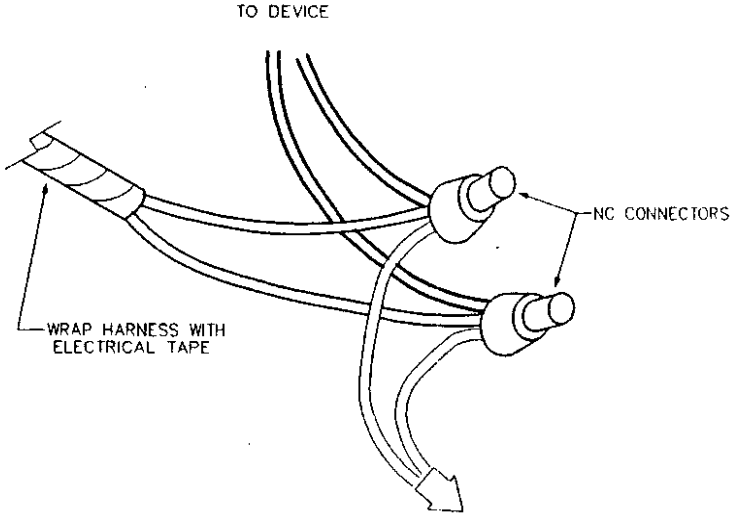

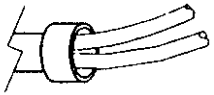

CORRECT

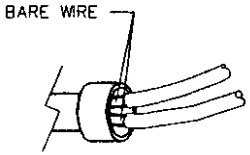

INCORRECT

NOTES:
1. WIRES MUST BE SMALL ENOUGH TO FULLY FIT INTO CONNECTORS.

D.C. RELEASE	DESCRIPTION	DATE	BY	SCALE: 1 1/2" = 1'-0"	USED ON:	FLEETWOOD RECREATIONAL VEHICLE GROUP	PAGE NO. 777-19-90953
				DRAWN: J. PATTON / DATE: MAY-06-92			SHEET 3 OF 4
				PROJECT: 97777300		TITLE: TYPICAL 120V & 12V WIRING	
97-00		03-27-96	DM	PLOT: 03/27/96 17:59:19 01milled	AUX. INFO.		

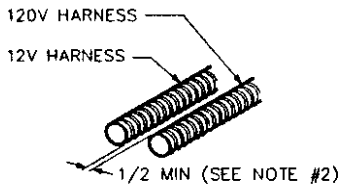

HARNESS PLACEMENT

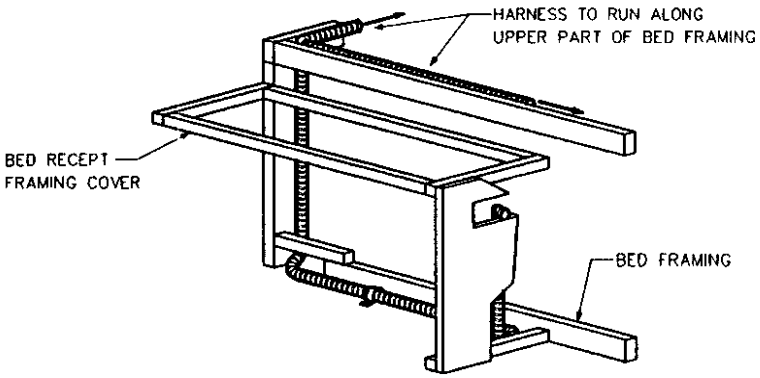

TYPICAL BED RECEPT ROUTING

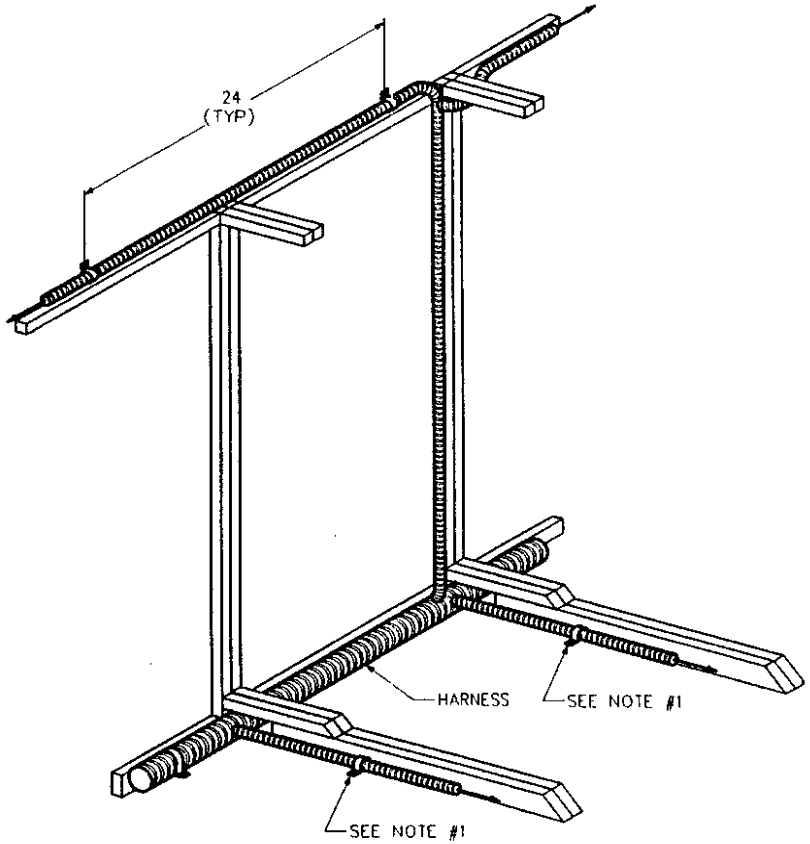

TYPICAL WIRING ROUTING @ CABINETS

S:
SE PLASTIC LOOP CLAMPS TO ATTACH HARNESS ALONG FLOOR & CABINETS (M87-0003).
/2" MINIMUM CLEARANCE REQUIRED BETWEEN 12V HARNESS AND 120V HARNESS.

10.69

D.C. RELEASE	DESCRIPTION	DATE	BY	SCALE 1" = 1'-0"	USED ON	FLEETWOOD RECREATIONAL VEHICLE GROUP	PAGE NO. 777-19-90953
				DRAWN J. PATTON / DATE MAY-06-92			SHEET 4 OF 4
				PROJECT 97777300		TITLE: TYPICAL 120V & 12V WIRING	
97-00		03-27-96	DM	PLOT: 03/27/96 18:00:33 01milled	AUX. INFO		

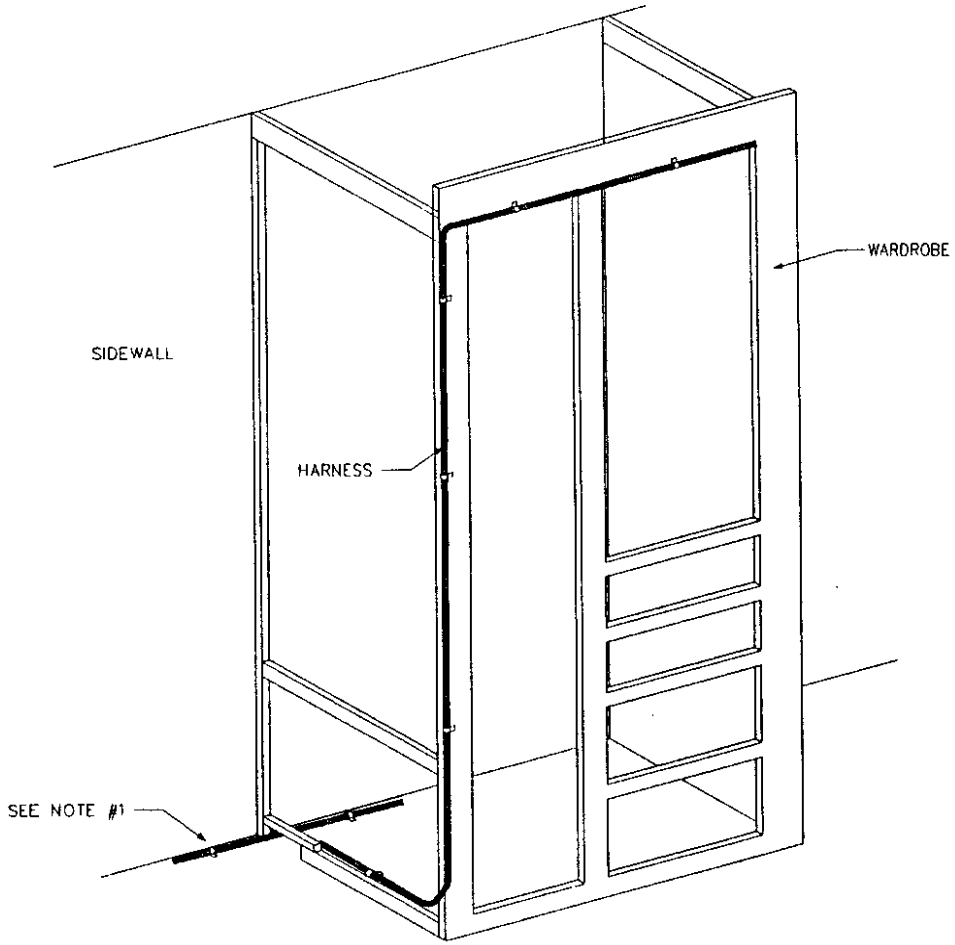

TYPICAL WIRE ROUTING @ WARDROBE

D.C. RELEASE	DESCRIPTION	DATE	BY	SCALE: 12" = 1'-0"	USED ON:	FLEETWOOD RECREATIONAL VEHICLE GROUP	PAGE NO. 777-19-90956
				DRAWN: RICHARD / DATE: MAY-07-91			SHEET 1 OF 1
				PROJECT: 97777300		TITLE: WATER PUMP WIRING INFO	
97-00		03-27-96	DM	PLOT: 03/27/96 18:01:47 01milled	AUX. INFO.		

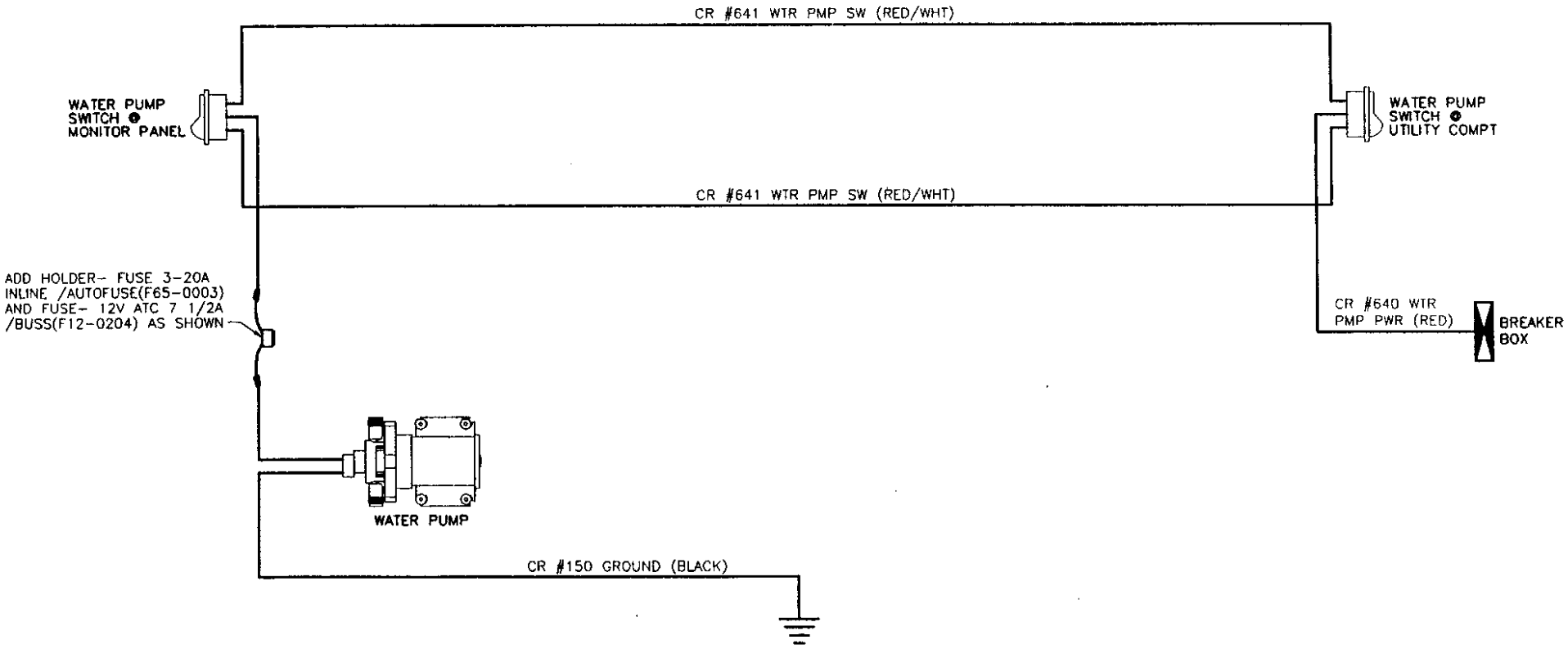

D.C. RELEASE	DESCRIPTION	DATE	BY	SCALE: 1/2" = 1'-0"	USED ON	FLEETWOOD RECREATIONAL VEHICLE GROUP	PAGE NO. 777-19-90965
				DRAWN: B.SPINUZZI DATE 05-14-96			SHEET 1 OF 6
				PROJECT: 97777301		TITLE: TELEPHONE JACK ROUTING INFO	
97-01	NEW DRAWING	05-14-96	BS	PLOT 05/14/96 11:12:01 01spinub	AUX INFO		

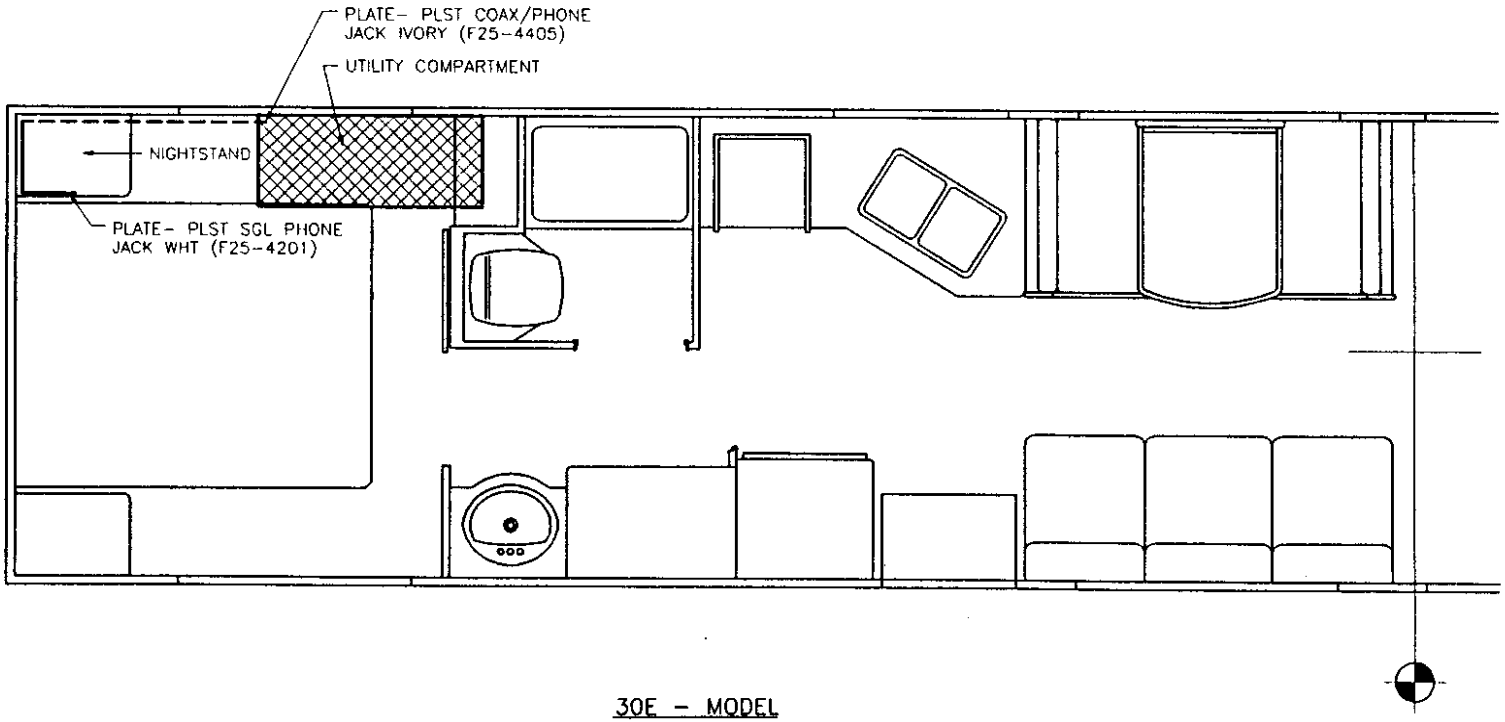

30E - MODEL

D.C. RELEASE	DESCRIPTION	DATE	BY	SCALE 1/2" = 1'-0"	USED ON	FLEETWOOD RECREATIONAL VEHICLE GROUP	PAGE NO. 777-19-90965
				DRAWN P.FLORES DATE 07-27-95			SHEET 2 OF 6
				PROJECT 97777300		TITLE: TELEPHONE JACK ROUTING INFO	
97-00		02-29-96	AF	PLOT 02/29/96 14:56:00 01franca	AUX INFO.		

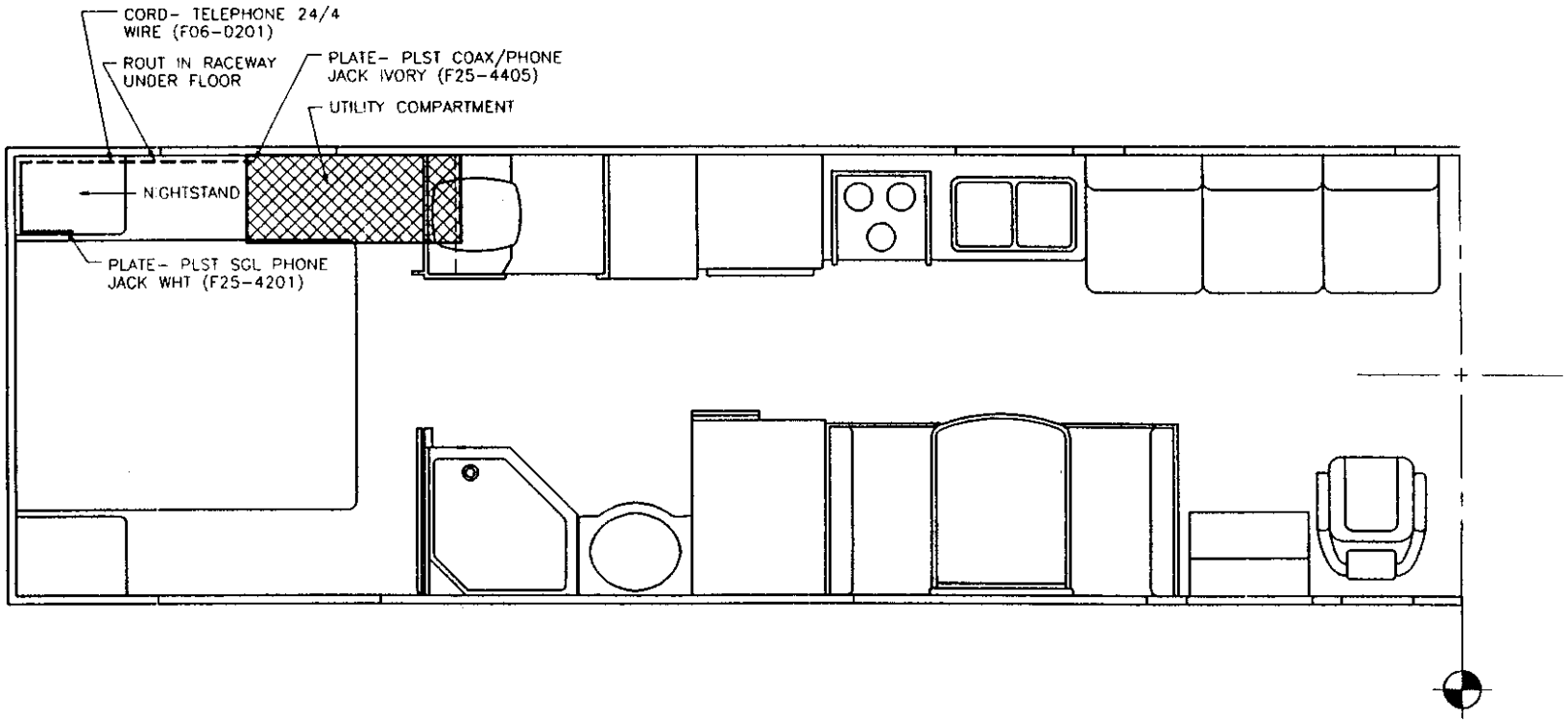

32G - MODEL

D.C. RELEASE	DESCRIPTION	DATE	BY	SCALE: 1/2" = 1'-0"	USED ON:	FLEETWOOD RECREATIONAL VEHICLE GROUP	PAGE NO: 777-19-90965
				DRAWN: F.OCHOA / DATE: 04-20-95			SHEET 3 OF 6
				PROJECT: 97777300		TITLE: TELEPHONE JACK ROUTING INFO	
97-00		02-29-96	AF	PLOT: 02/29/96 14:57:09 01franca	AUX. INFO.		

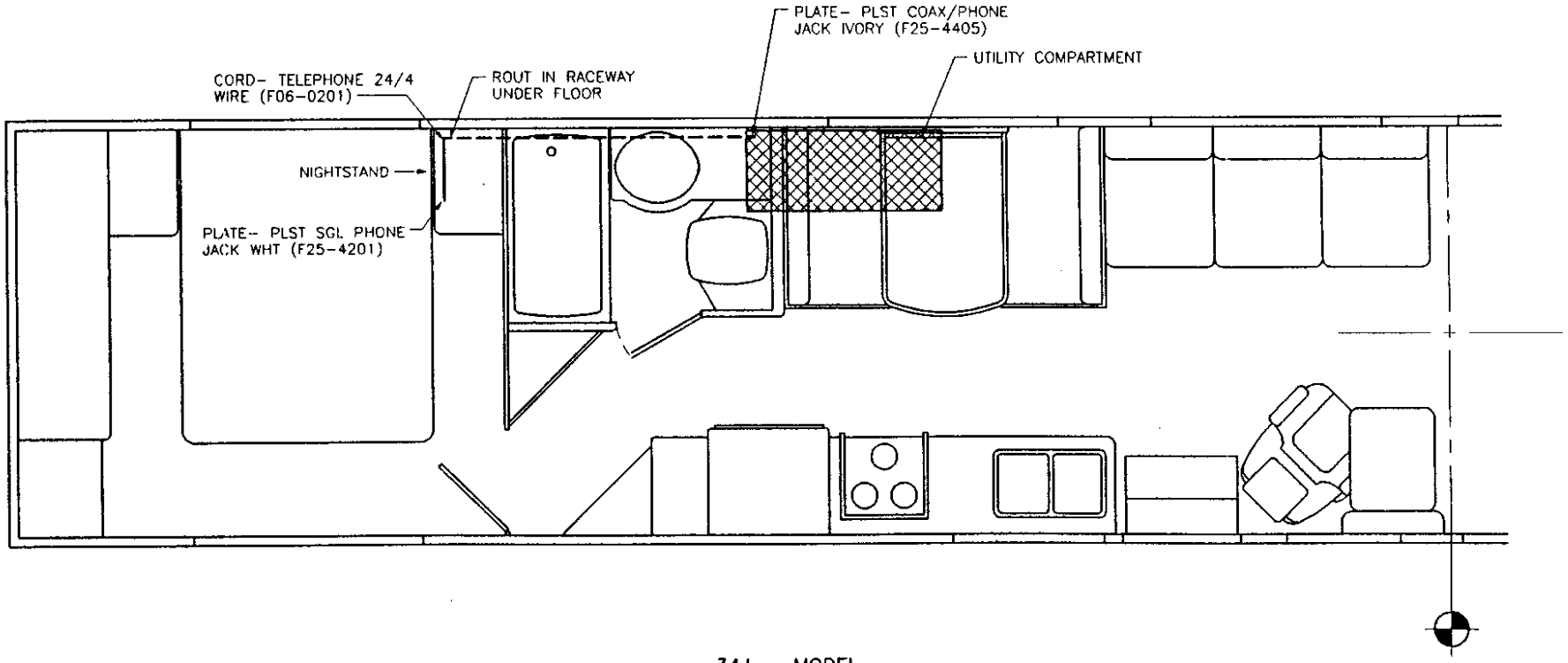

34J - MODEL

D.C. RELEASE	DESCRIPTION	DATE	BY	SCALE: 1/2" = 1'-0"	USED ON:	FLEETWOOD RECREATIONAL VEHICLE GROUP	PAGE NO. 777-19-90965
				DRAWN: F.OCHOA / DATE: 04-20-95			SHEET 4 OF 6
				PROJECT: 97777300		TITLE: TELEPHONE JACK ROUTING INFO	
97-00		02-29-96	AF	PLOT: 02/29/96 14:58:23 01franco	AUX. INFO.		

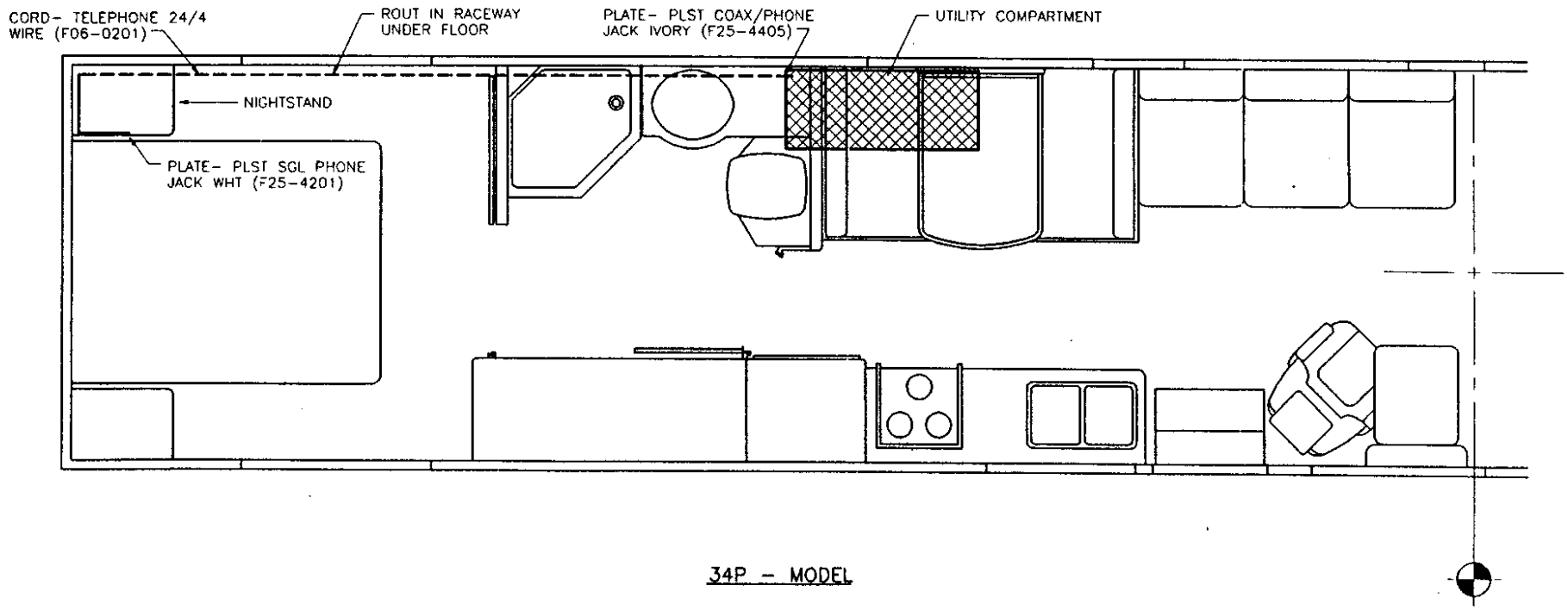

34P - MODEL

D.C. RELEASE	DESCRIPTION	DATE	BY	SCALE: 1/2" = 1'-0"	USED ON:	FLEETWOOD RECREATIONAL VEHICLE GROUP	PAGE NO. 777-19-90965
				DRAWN: F.OCHOA / DATE: 04-20-95			SHEET 5 OF 6
				PROJECT: 97777300		TITLE: TELEPHONE JACK ROUTING INFO	
97-00		02-29-96	AF	PLOT: 02/29/96 14:59:38 01franco	AUX. INFO.		

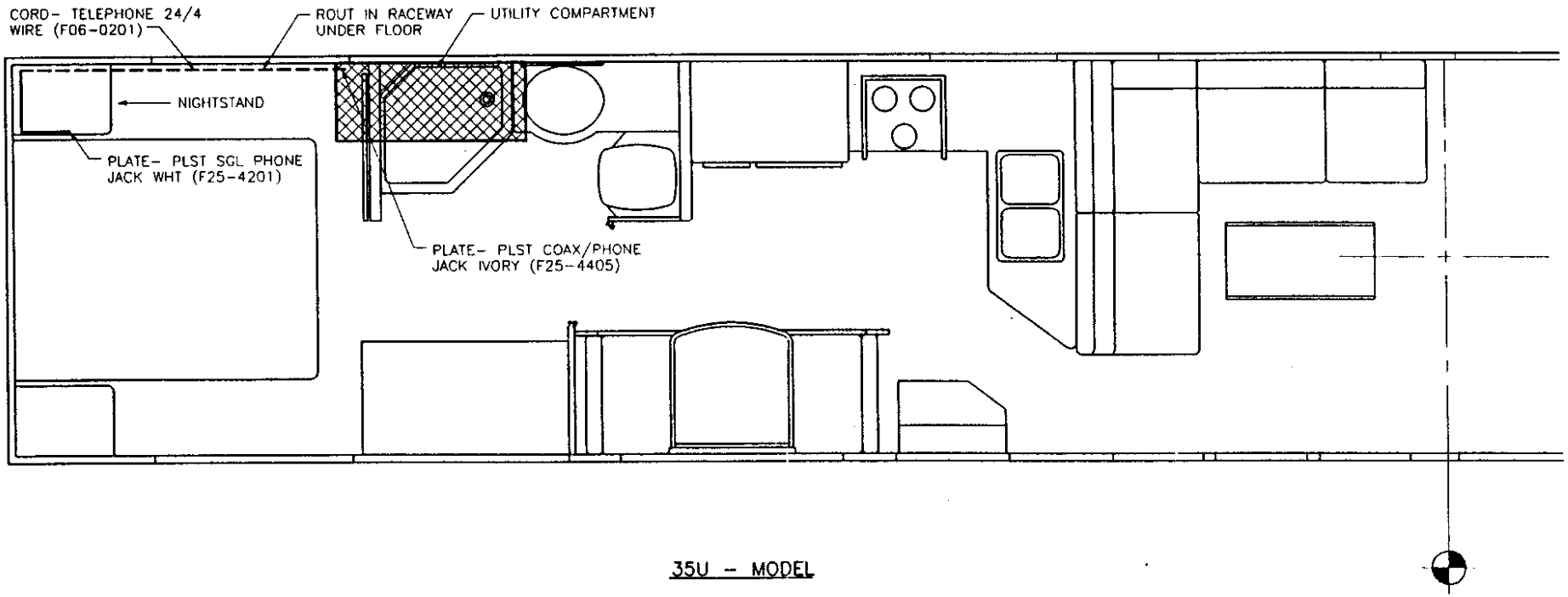

35U - MODEL

D.C. RELEASE	DESCRIPTION	DATE	BY	SCALE: 1/2" = 1'-0"	USED ON:	FLEETWOOD RECREATIONAL VEHICLE GROUP	PAGE NO. 777-19-90965
				DRAWN: S.STACHOWSK DATE: 02-29-96			SHEET 6 OF 6
				PROJECT: 97777300		TITLE: TELEPHONE JACK ROUTING INFO	
97-00		02-29-96	SS	PLOT: 02/29/96 16:17:37 01stachs	AUX INFO		

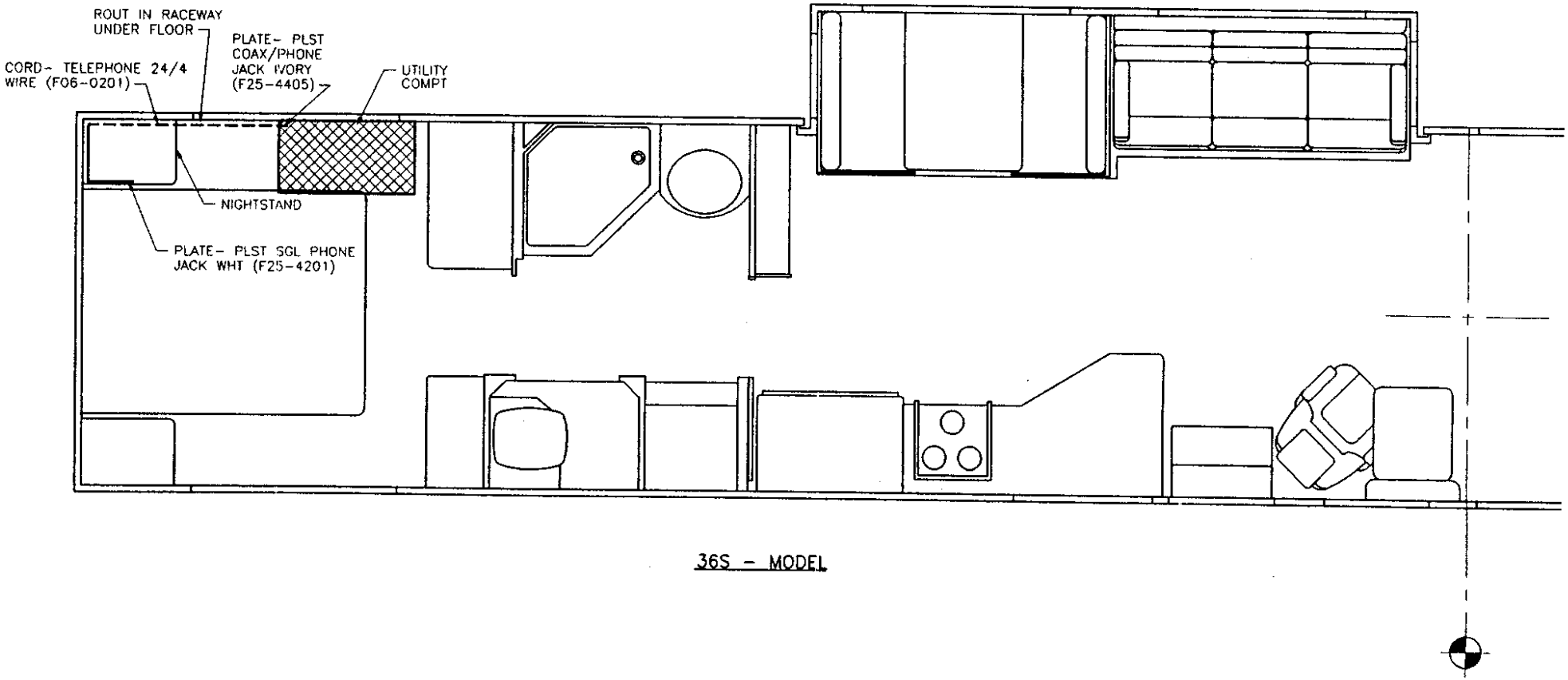

36S - MODEL

D.C. RELEASE	DESCRIPTION	DATE	BY	SCALE: 12" = 1'-0"	USED ON:	FLEETWOOD RECREATIONAL VEHICLE GROUP	PAGE NO. 777-19-90966
				DRAWN: J. PATTON / DATE: JUN-10-91			SHEET 1 OF 1
				PROJECT: 97777300		TITLE: PORCH & FLOOR LIGHT WIRING	
97-00		03-27-96	DM	PLOT: 03/27/96 18:02:09 01milled	AUX. INFO.		

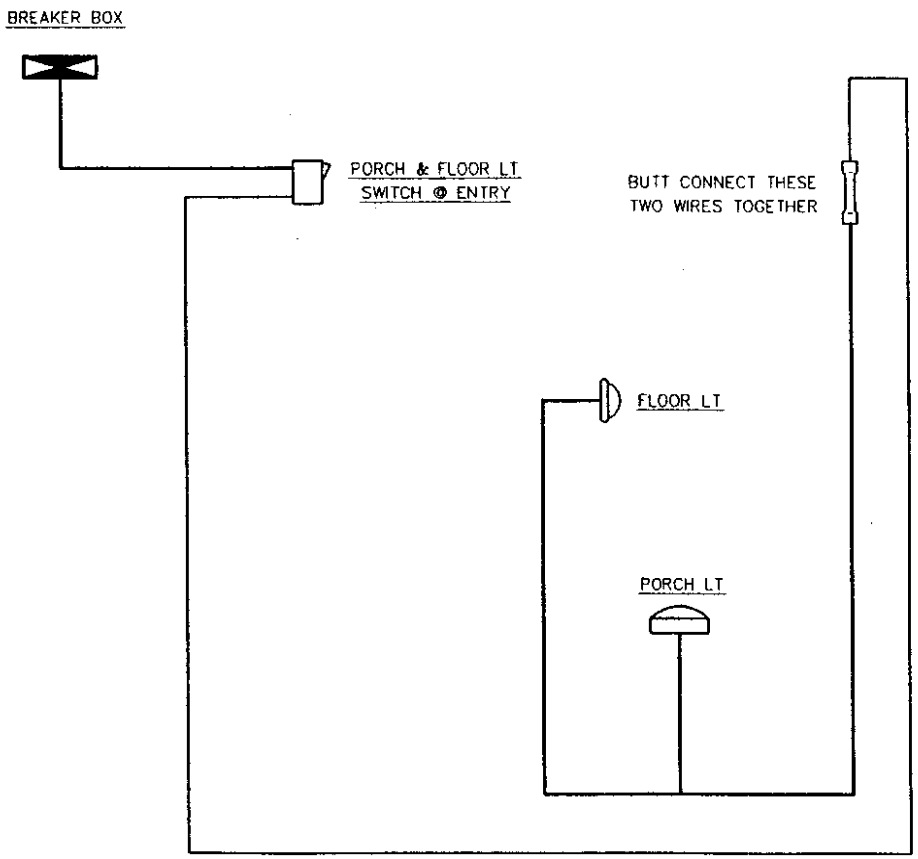

PORCH & FLOOR LIGHT WIRING

D.C. RELEASE	DESCRIPTION	DATE	BY	SCALE: 12" = 1'-0"	USED ON:	FLEETWOOD RECREATIONAL VEHICLE GROUP	PAGE NO. 777-19-90970
				DRAWN: J.BERGERON / DATE: 02-03-93			SHEET 1 OF 2
				PROJECT: 97777300		TITLE: MONITOR PANEL WIRING INFO	
97-00		03-27-96	DM	PLOT: 03/27/96 18:04:23 01milled	AUX. INFO		

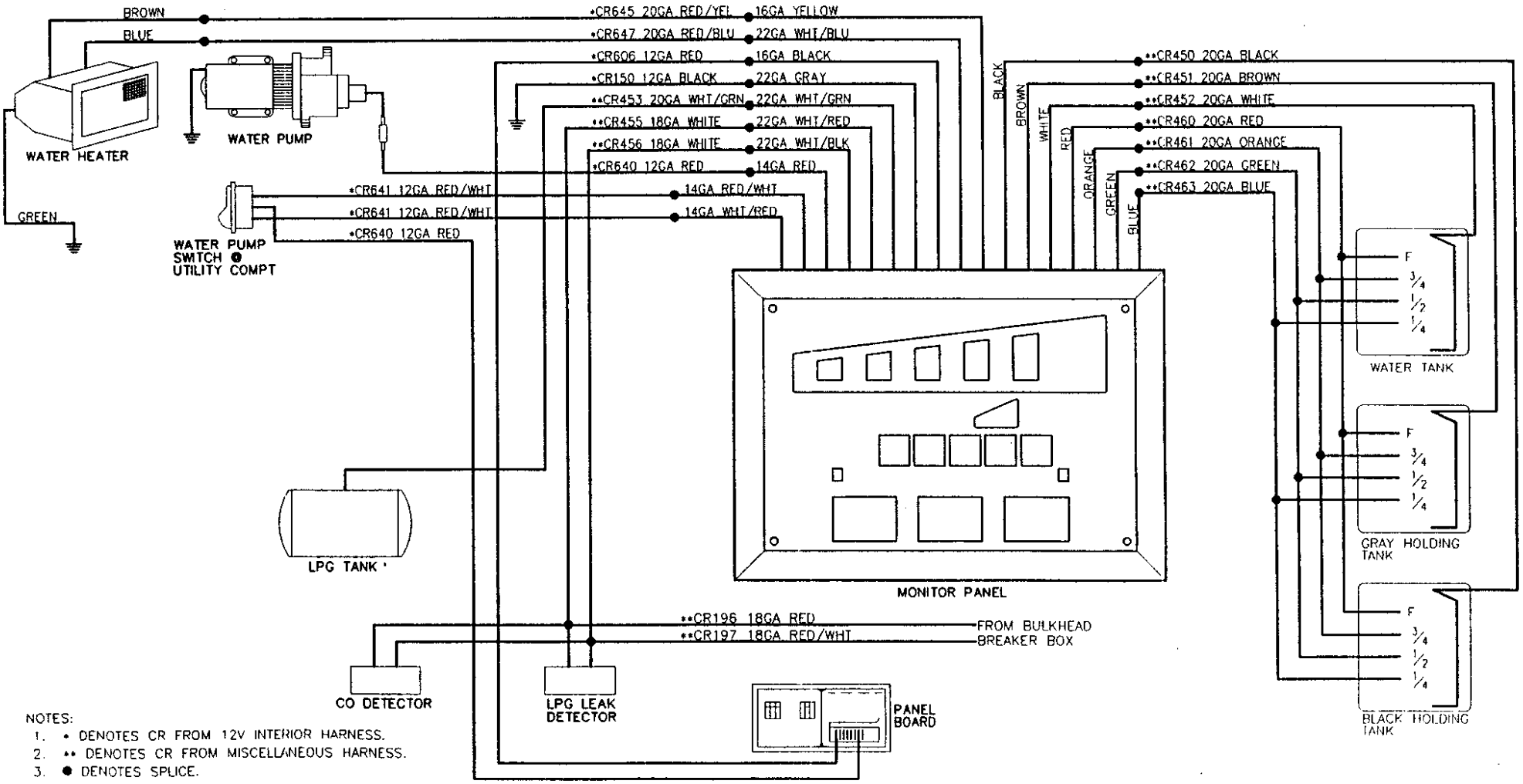

NOTES:
1. * DENOTES CR FROM 12V INTERIOR HARNESS.
2. ** DENOTES CR FROM MISCELLANEOUS HARNESS.
3. ● DENOTES SPLICE.

D.C. RELEASE	DESCRIPTION	DATE	BY	SCALE 12" = 1'-0"	USED ON
				DRAWN S.STACHOWSK DATE 10-02-95	
				PROJECT: 97777300	
97-00		02-29-96	SS	PLOT: 02/29/96 13:46:57 01stachs	AUX. INFO.

FLEETWOOD RECREATIONAL VEHICLE GROUP

PAGE NO. 777-19-90970

SHEET 2 OF 2

TITLE: MONITOR PANEL WIRING INFO

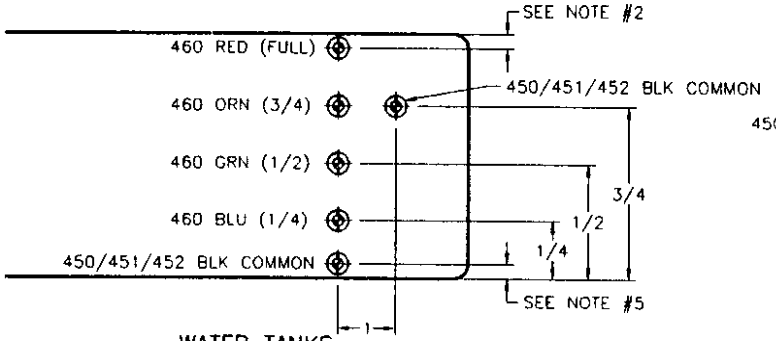

WATER TANKS

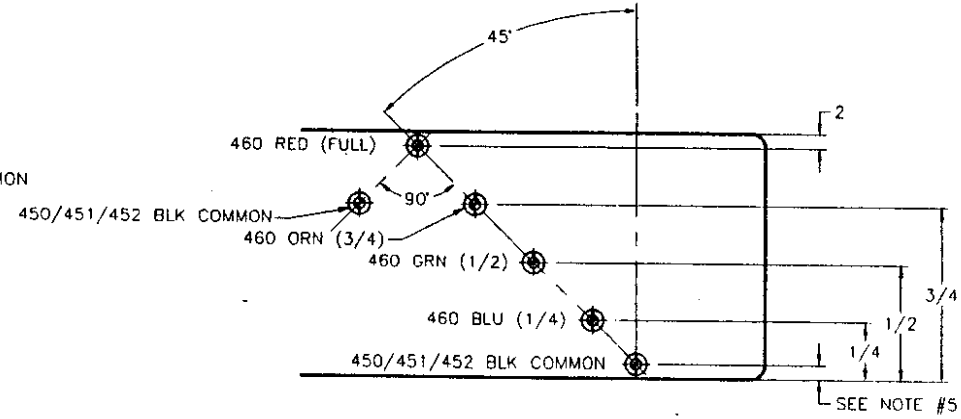

WASTE TANKS

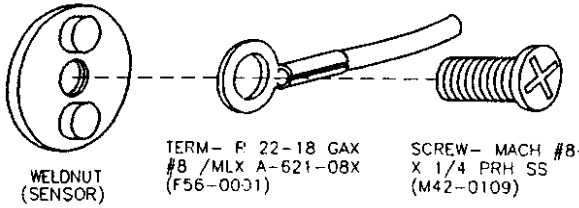

WASTE/WATER TANK SENSOR

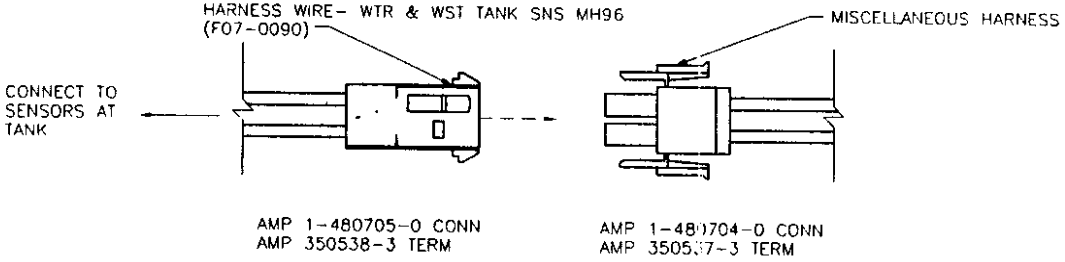

HARNESS CONNECTION DETAIL

NOTES:

1. DIVIDE TANK HEIGHT INTO FOUR EQUAL PARTS BY VOLUME AND INSTALL AT 1/4, 1/2, 3/4 LEVELS AS SHOWN.
2. FULL INDICATION SENSOR (WELDNUT) MOUNTED AS CLOSE TO TOP OF TANK AS PRACTICAL.
3. WELDNUTS NOT REQUIRED FOR EMPTY INDICATION.
4. DO NOT CRIMP CONNECTOR UNTIL WIRE HAS BEEN PROPERLY SIZED.
5. COMMON SENSOR (WELDNUT) MOUNTED AS CLOSE TO BOTTOM OF TANK AS PRACTICAL.
6. SENSORS TO BE INSTALLED AS SHOWN TO PREVENT SHORT-CIRCUITS DUE TO CLOGGING.

D.C. RELEASE	DESCRIPTION	DATE	BY	SCALE: 5/8" = 1'-0"	USED ON:	FLEETWOOD RECREATIONAL VEHICLE GROUP	PAGE NO: 777-19-90975
				DRAWN: J.CORTEZ / DATE: 12-14-95			SHEET 1 OF 2
				PROJECT: 97777300		TITLE: CONTROL PANEL HARNESS ROUTING	
97-00	NEW DRAWING	03-22-96	RM	PLOT: 03/22/96 08:51:17 01martir	AUX. INFO	& LOCATION INFO.	

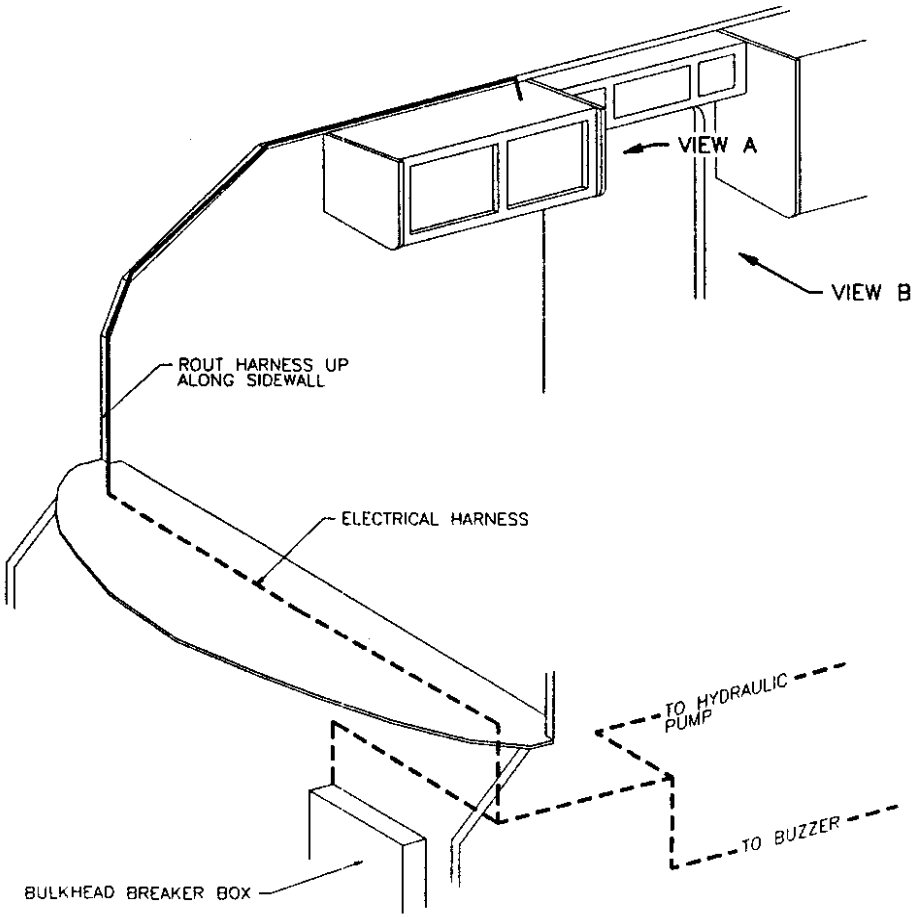

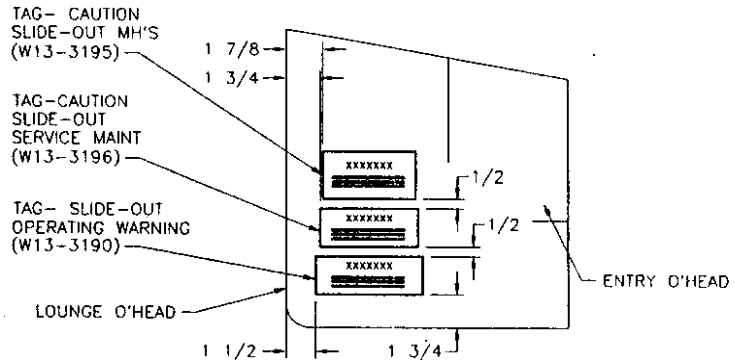

VIEW A
SCALE: 2" = 1'-0"

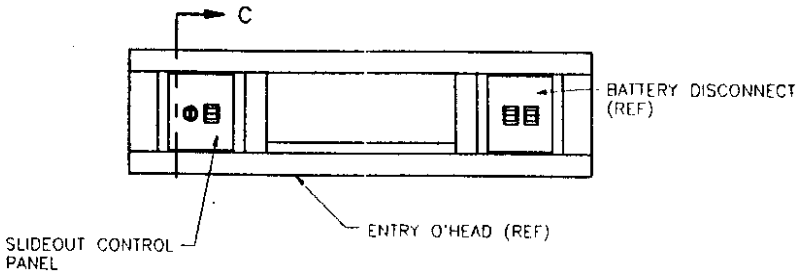

VIEW B
SCALE: 1 1/2" = 1'-0"

D.C. RELEASE	DESCRIPTION	DATE	BY	SCALE: 6" = 1'-0"	USED ON:	FLEETWOOD RECREATIONAL VEHICLE GROUP	PAGE NO. 777-19-90975
				DRAWN: J.CORTEZ / DATE: 12-14-95			SHEET 2 OF 2
				PROJECT: 97777300		TITLE: CONTROL PANEL HARNESS ROUTING	
97-00	NEW DRAWING	03-22-96	RM	PLOT: 03/22/96 08:57:57 01martir	AUX. INFO	& LOCATION INFO.	

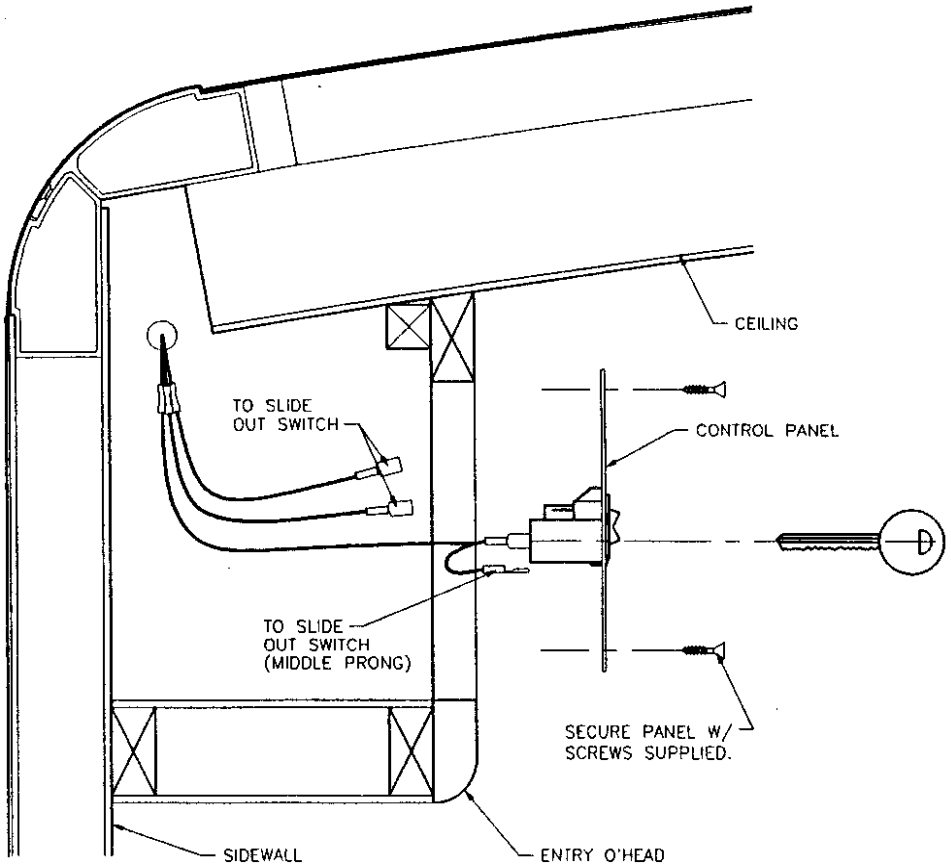

SECTION C
SCALE: .6" = 1'-0"

10.82

D.C. RELEASE	DESCRIPTION	DATE	BY	SCALE: 3/8" = 1'-0"	USED ON:	FLEETWOOD RECREATIONAL VEHICLE GROUP	PAGE NO. 777-19-90976
				DRAWN: J.CORTEZ / DATE: 12-14-95			SHEET 1 OF 1
				PROJECT: 97777300		TITLE: SLIDE-OUT WIRE ROUTING DIAGRAM	
97-00	NEW DRAWING	03-22-96	RM	PLOT: 03/22/96 09:58:01 01mortir	AUX. INFO.		

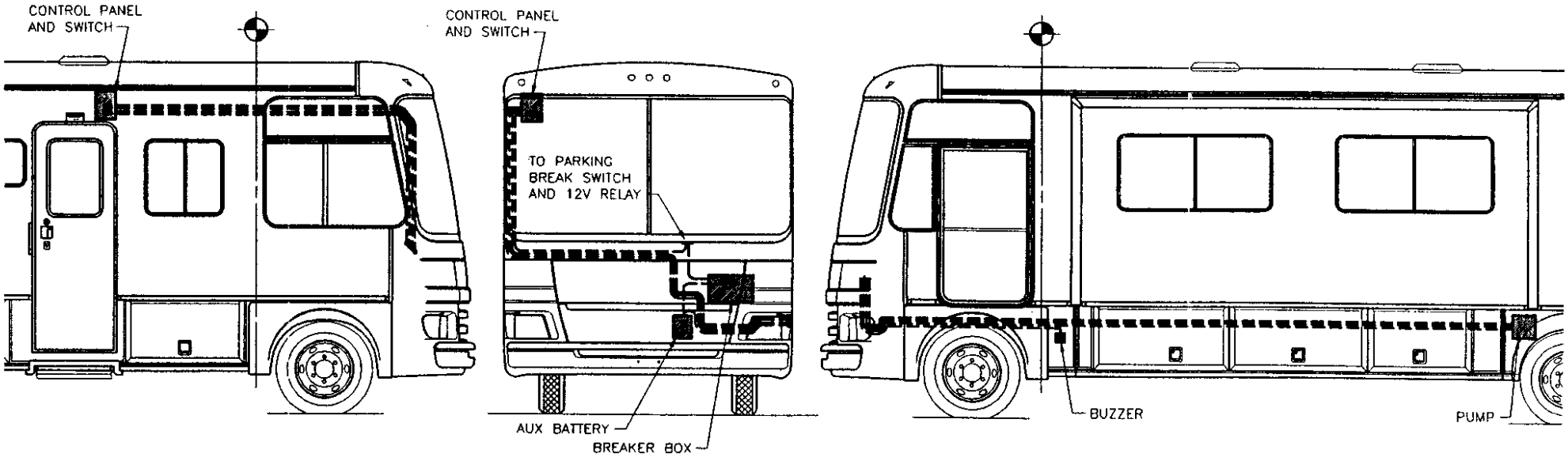

D.C. RELEASE	DESCRIPTION	DATE	BY	SCALE: 3/8" = 1'-0"	USED ON:	FLEETWOOD RECREATIONAL VEHICLE GROUP	PAGE NO 777-19-90980
				DRAWN S.PLATT / DATE 10-04-95			SHEET 1 OF 1
				PROJECT: 97777300		TITLE: REAR VISION CAMERA CABLE INFO	
97-00		03-27-96	DM	PLOT: 03/27/96 18:07:38 01milled	AUX INFO.		

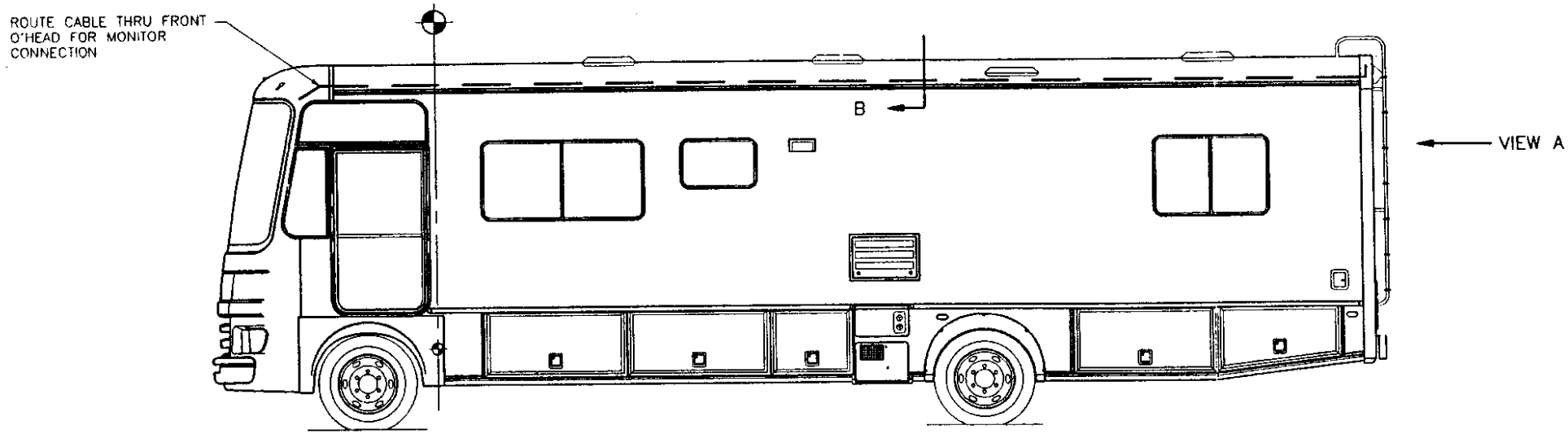

CABLE ROUTING DETAIL

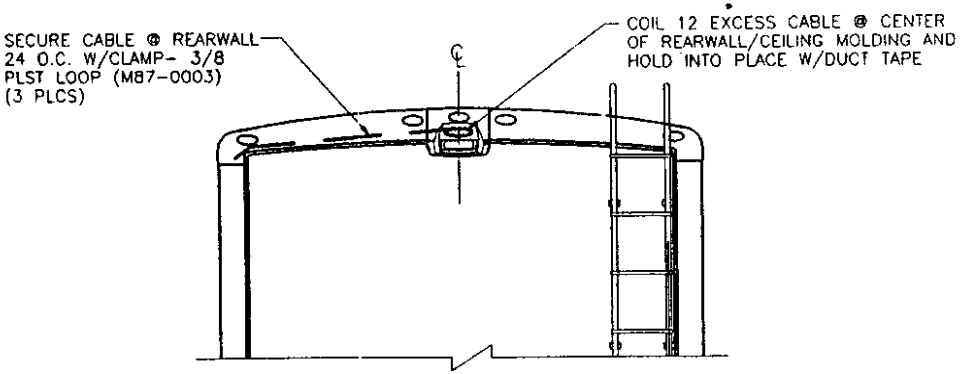

VIEW A
SCALE: 1/2" = 1'-0"

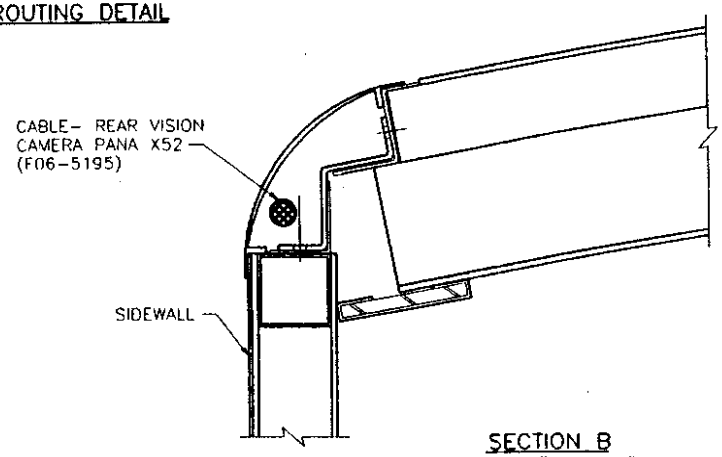

SECTION B
SCALE: 5" = 1'-0"

D.C. RELEASE	DESCRIPTION	DATE	BY	SCALE: 12" = 1'-0"	USED ON:	FLEETWOOD RECREATIONAL VEHICLE GROUP	PAGE NO. 777-19-90967
				DRAWN: J. PATTON / DATE: JUN-11-91			SHEET 1 OF 1
				PROJECT: 97777300		TITLE: TV CABLE TAG INFO	
97-00		03-27-96	DM	PLOT: 03/27/96 18:02:27 01milled	AUX. INFO.		

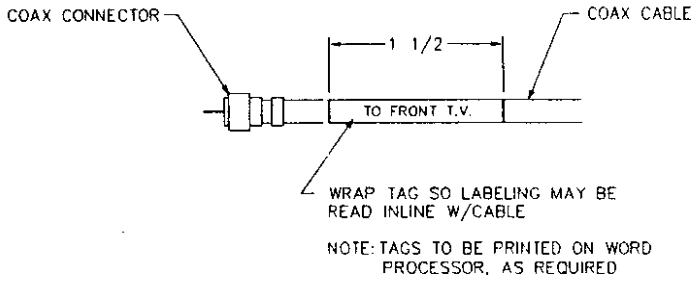

TAG INSTALLATION DETAIL

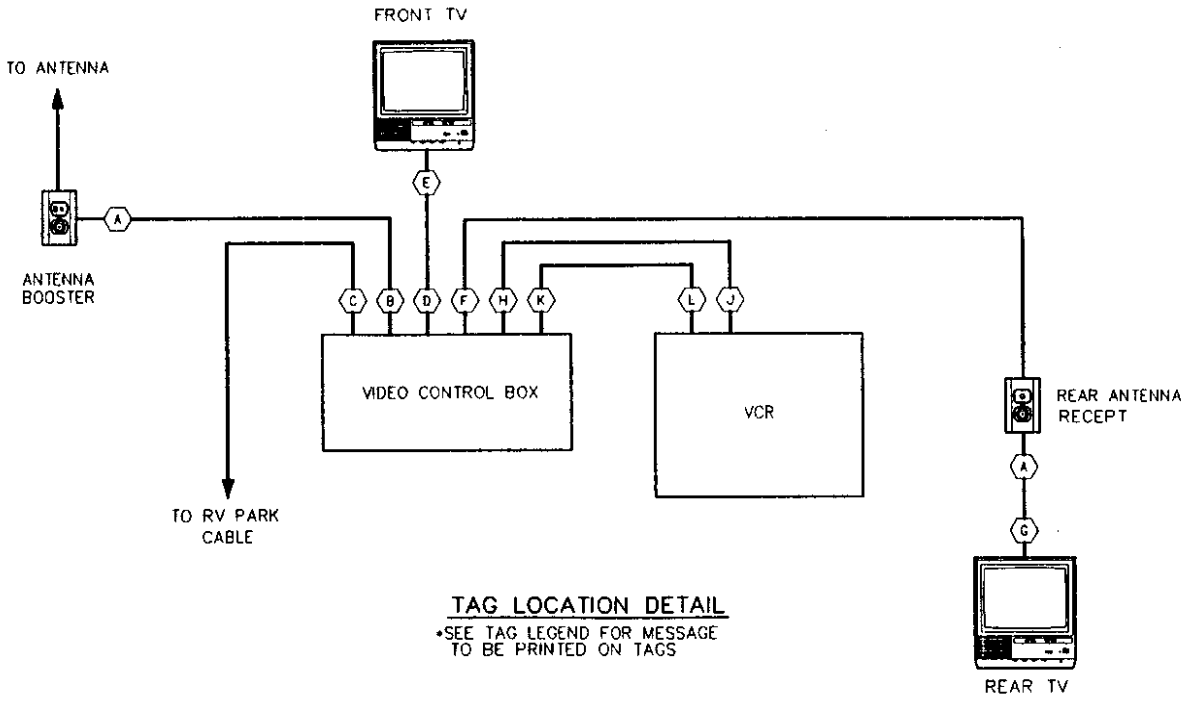

TAG LOCATION DETAIL

*SEE TAG LEGEND FOR MESSAGE TO BE PRINTED ON TAGS

TAG LEGEND

- A — TO ANTENNA RECEPT
- B — FROM ANTENNA
- C — FROM RV PARK CABLE
- D — FROM FRONT TV
- E — TO FRONT TV
- F — FROM REAR TV
- G — TO REAR TV
- H — FROM VCR OUT
- J — TO VCR OUT
- K — FROM VCR IN
- L — TO VCR IN

D.C. RELEASE	DESCRIPTION	DATE	BY	SCALE: 1/2" = 1' -0"	USED ON:	FLEETWOOD RECREATIONAL VEHICLE GROUP	PAGE NO. 777-19-90968
				DRAWN: K.KLOKE / DATE: 04-23-93			SHEET 1 OF 1
				PROJECT: 97777300		TITLE: TAP & SPLICE CONN INFO	
97-00		03-27-96	DM	PLOT: 03/27/96 18:02:55 01milled	AUX. INFO		

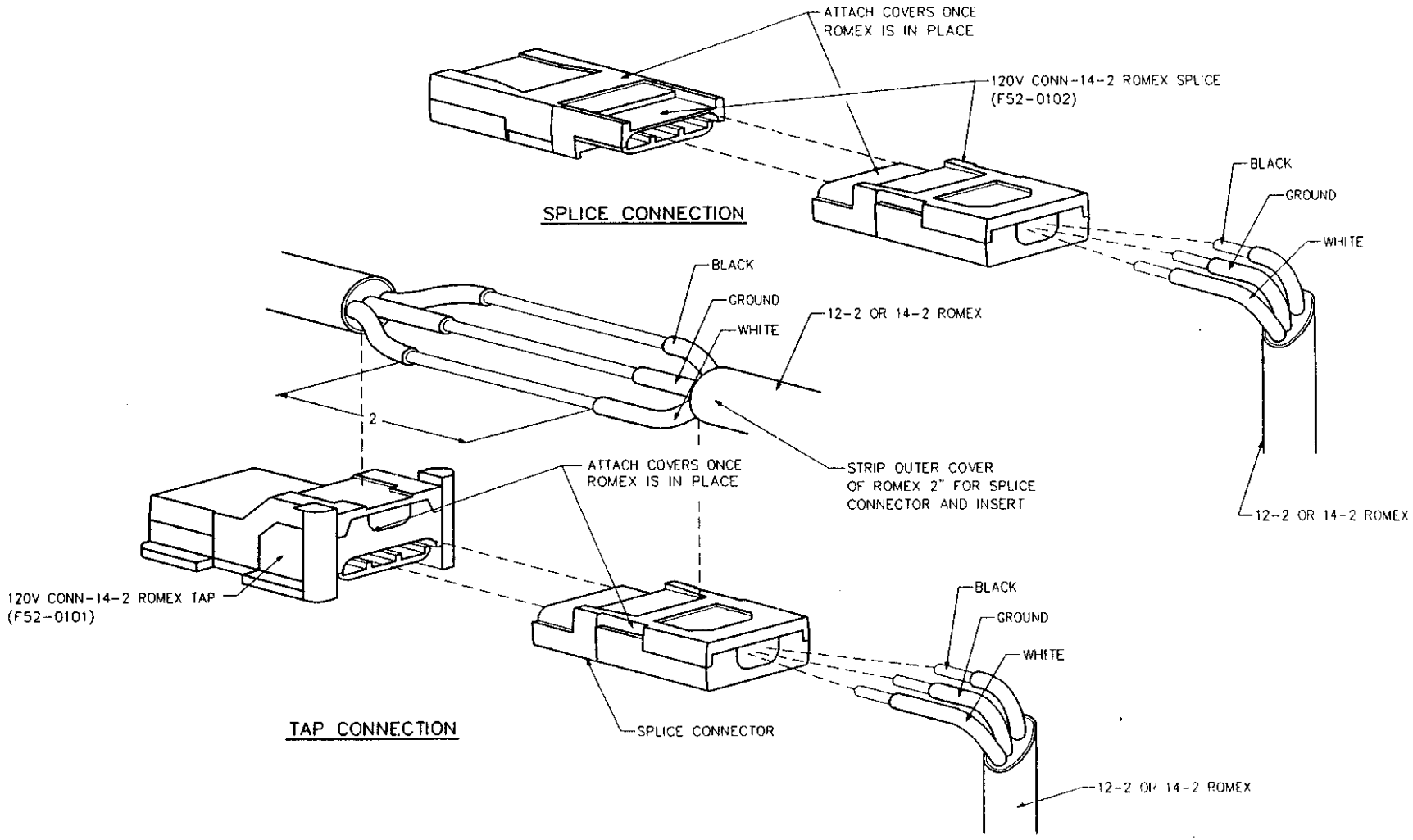

D.C. RELEASE	DESCRIPTION	DATE	BY	SCALE 3/4" = 1'-0"	USED ON:	FLEETWOOD RECREATIONAL VEHICLE GROUP	PAGE NO. 777-19-90972
				DRAWN J.CORTEZ DATE 01-23-95			SHEET 1 OF 2
				PROJECT 97777300		TITLE: FRONT & REAR HARNESS LOCATION INFO	
97-00		03-27-96	DM	PLOT: 03/27/96 18:05:41 01milled	AUX. INFO		

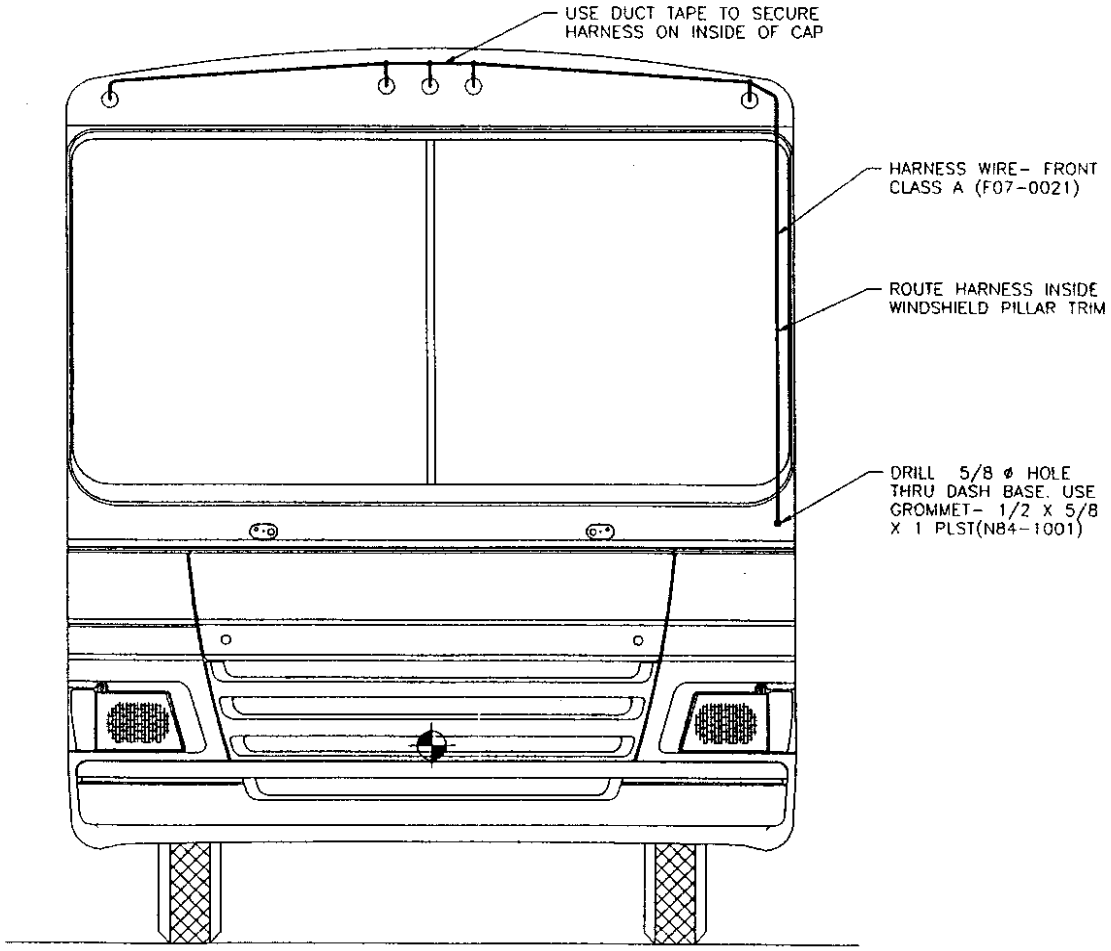

FRONT VIEW

D.C. RELEASE	DESCRIPTION	DATE	BY	SCALE: 12" = 1'-0"	USED ON:	FLEETWOOD RECREATIONAL VEHICLE GROUP	PAGE NO. 777-19-90972
				DRAWN: J.CORTEZ / DATE: 01-23-95			SHEET 2 OF 2
				PROJECT: 97777300		TITLE: FRONT & REAR HARNESS LOCATION INFO	
97-00		03-27-96	DM	PLOT: 03/27/96 18:06:15 01milled	AUX INFO		

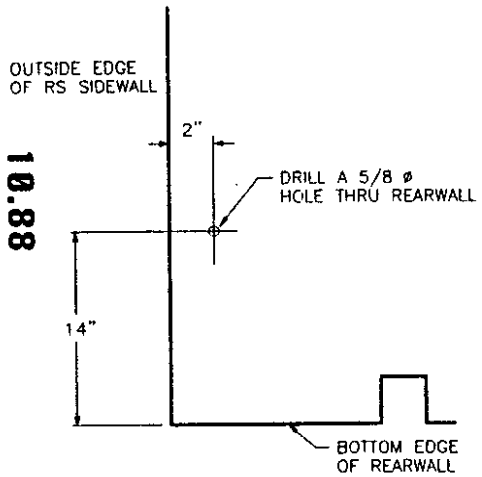

DETAIL

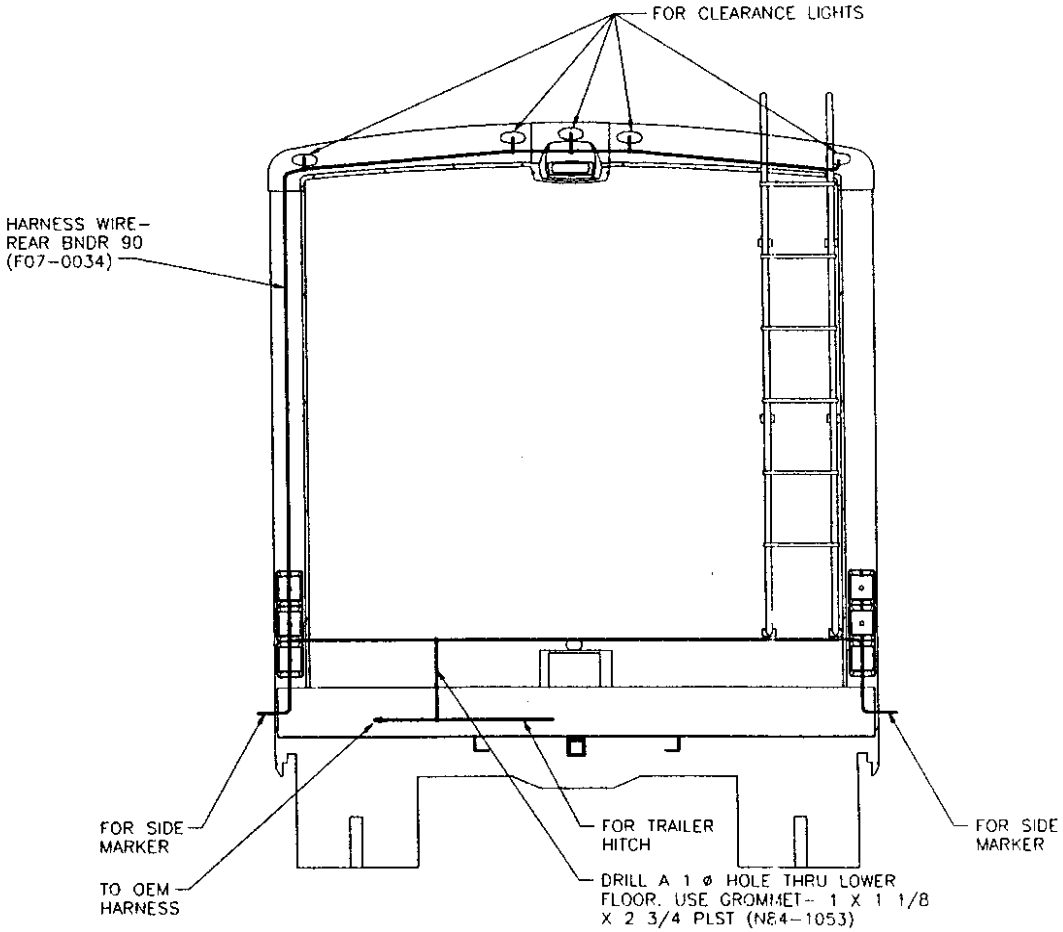

REAR VIEW
SCALE: 5/8" = 1'-0"

10.88

D.C. RELEASE	DESCRIPTION	DATE	BY	SCALE: 12" = 1'-0"	USED ON:	FLEETWOOD RECREATIONAL VEHICLE GROUP	PAGE NO. 777-21-17100
				DRAWN: P.BRADY / DATE: 01-22-96			SHEET 1 OF 3
				PROJECT: 97777300		TITLE: HEADLAMP/SIGNAL LAMP WIRING - CHEVY	
97-00		03-27-96	DM	PLOT: 03/27/96 18:17:52 01milled	AUX. INFO.		

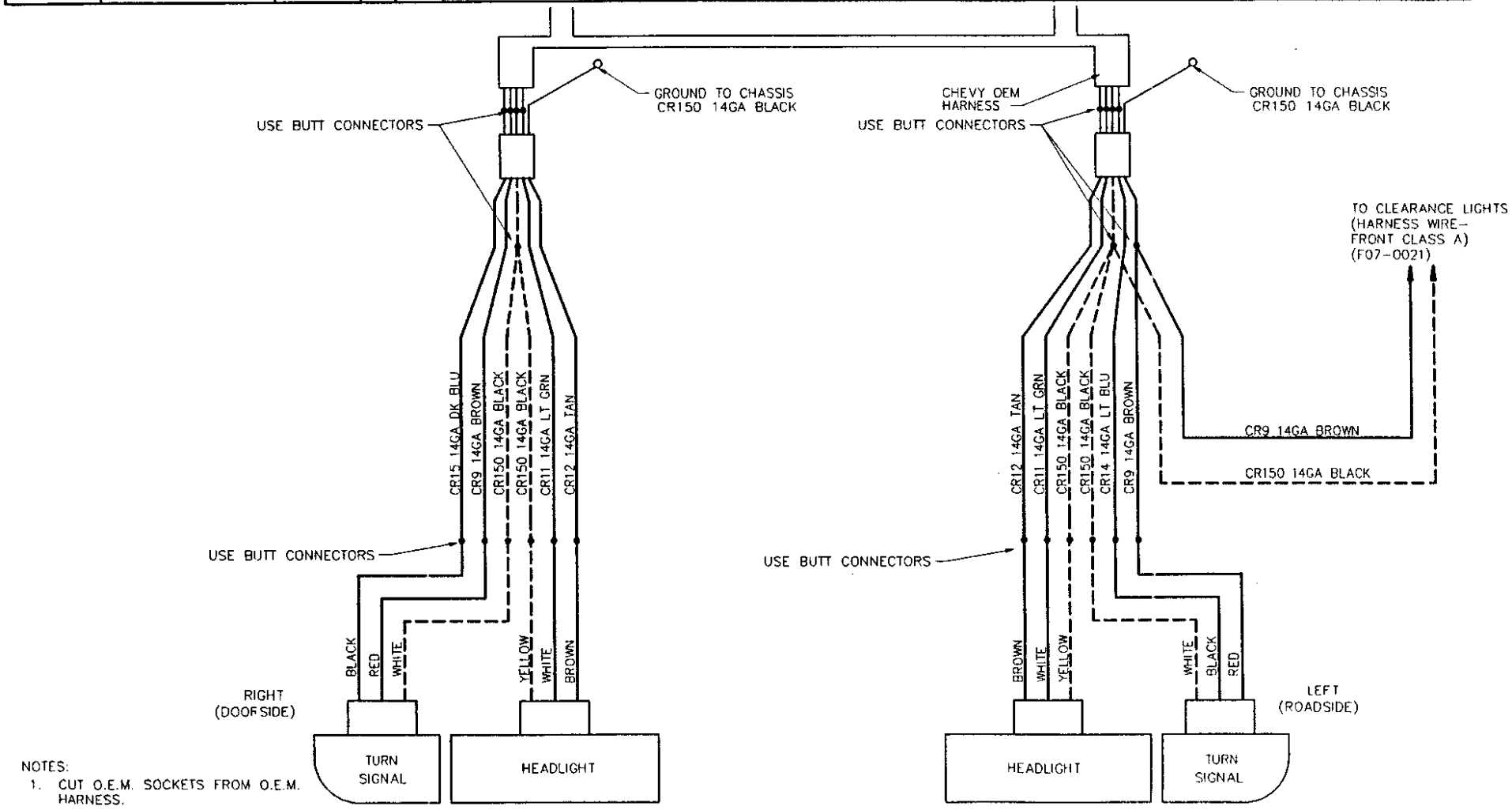

NOTES:
1. CUT O.E.M. SOCKETS FROM O.E.M. HARNESS.

D.C. RELEASE	DESCRIPTION	DATE	BY	SCALE: 12" = 1'-0"	USED ON:	FLEETWOOD RECREATIONAL VEHICLE GROUP	PAGE NO. 777-21-17100
				DRAWN: P.BRADY DATE: 01-22-96			SHEET 2 OF 3
				PROJECT: 97777300		TITLE: HEADLAMP/SIGNAL LAMP WIRING - CHEVY	
97-00		03-27-96	DM	PLOT: 03/27/96 18:18:23 01milled	AUX INFO		

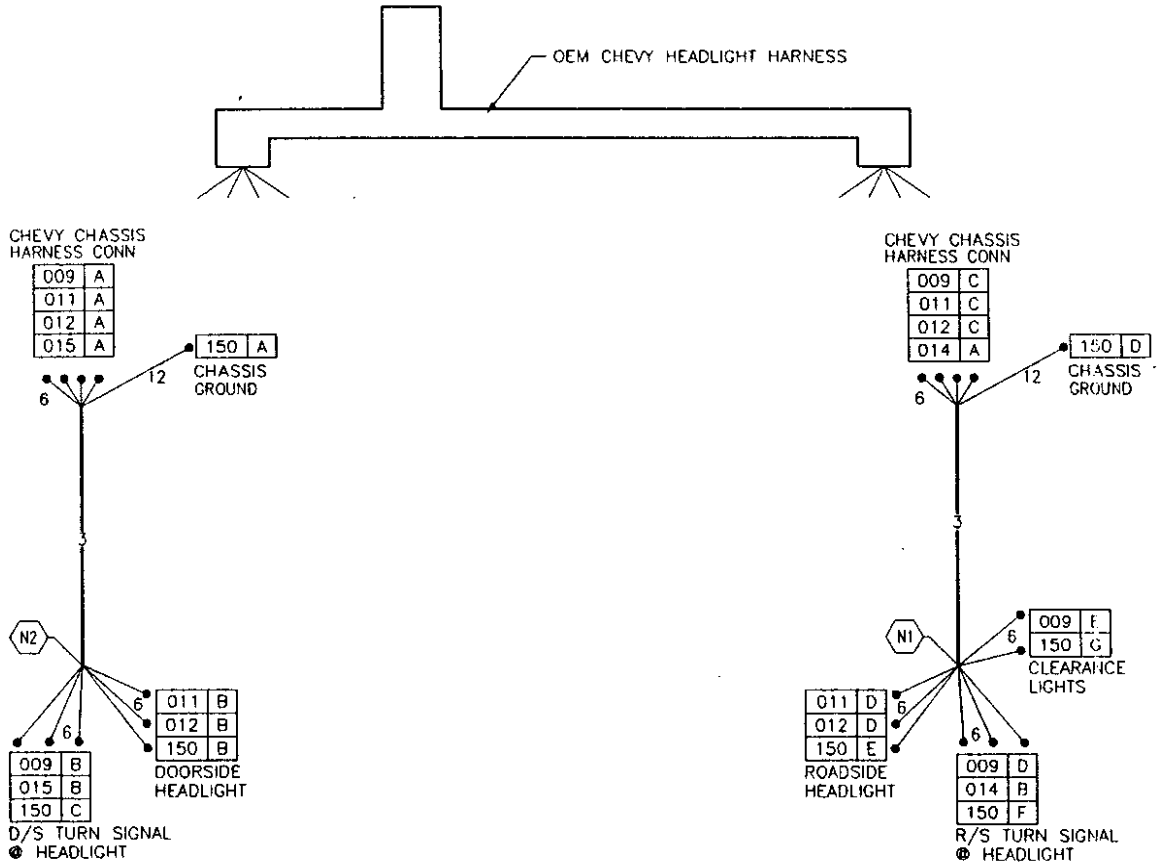

10.90

D.C. RELEASE	DESCRIPTION	DATE	BY	SCALE: 12" = 1'-0"	USED ON:	FLEETWOOD RECREATIONAL VEHICLE GROUP	PAGE NO. 777-21-17100
				DRAWN: P.BRADY / DATE: 01-22-96			SHEET 3 OF 3
				PROJECT: 97777300		TITLE: HEADLAMP/SIGNAL LAMP WIRING - CHEVY	
97-00		03-27-96	DM	PLOT: 03/27/96 18:18:50 01milled	AUX INFO:		

F/CIR.#	GA	COLOR	END	CONNECTOR	PIN	TERMINAL #	LENGTH	TERMINAL #	PIN	CONNECTOR	END	NOTES
009	14	BROWN	A	-	-	MLX NC-1610	15	MLX SBB-16-14	-	-	B	TO D/S TURN SIGNAL @ HEADLIGHT
009	14	BROWN	C	-	-	MLX NC-1610	15	MLX SBB-16-14	-	-	D	TO R/S TURN SIGNAL @ HEADLIGHT
009	14	BROWN	N1	-	-	MLX NC-1610	12	MLX SBB-16-14	-	-	E	SPLICE @ 009 CD N1/ CLEARANCE LIGHTS
011	14	LT GRN	A	-	-	MLX NC-1610	15	MLX SBB-16-14	-	-	B	TO DOORSIDE HEADLIGHT HI
011	14	LT GRN	C	-	-	MLX NC-1610	15	MLX SBB-16-14	-	-	D	TO ROADSIDE HEADLIGHT HI
012	14	TAN	A	-	-	MLX NC-1610	15	MLX SBB-16-14	-	-	B	TO DOORSIDE HEADLIGHT LO
012	14	TAN	C	-	-	MLX NC-1610	15	MLX SBB-16-14	-	-	D	TO ROADSIDE HEADLIGHT LO
014	14	LT BLU	A	-	-	MLX NC-1610	15	MLX SBB-16-14	-	-	B	TO R/S TURN SIGNAL @ HEADLIGHT
015	14	DK BLU	A	-	-	MLX NC-1610	15	MLX SBB-16-14	-	-	B	TO D/S TURN SIGNAL @ HEADLIGHT
150	14	BLK	A	-	-	MLX-637-10X	21	MLX SBB-16-14	-	-	B	TO DOORSIDE HEADLIGHT
150	14	BLK	N2	-	-	MLX NC-1610	15	MLX SBB-16-14	-	-	C	SPLICE @ 150 AB N2/ D/S TURN SIG @ HDLT
150	14	BLK	D	-	-	MLX 637-10X	21	MLX SBB-16-14	-	-	E	TO ROADSIDE HEADLIGHT
150	14	BLK	N1	-	-	MLX NC-1610	15	MLX SBB-16-14	-	-	F	SPLICE @ 150 DE N1/ R/S TURN SIG @ HDLT
150	14	BLK	N1	-	-	MLX NC-1610	12	MLX SBB-16-14	-	-	G	SPLICE @ 150 DE N1/ CLEARANCE LIGHTS

D.C. RELEASE	DESCRIPTION	DATE	BY	SCALE: 12" = 1'-0"	USED ON:	FLEETWOOD RECREATIONAL VEHICLE GROUP	PAGE NO. 777-21-17200
				DRAWN: S.STACHOWSK DATE: 10-05-95			SHEET 1 OF 3
				PROJECT: 97777300		TITLE: HEADLAMP/SIGNAL LAMP WIRING - FORD	
97-00		03-27-96	DM	PLOT: 03/27/96 18:19:22 01milled	AUX. INFO.		

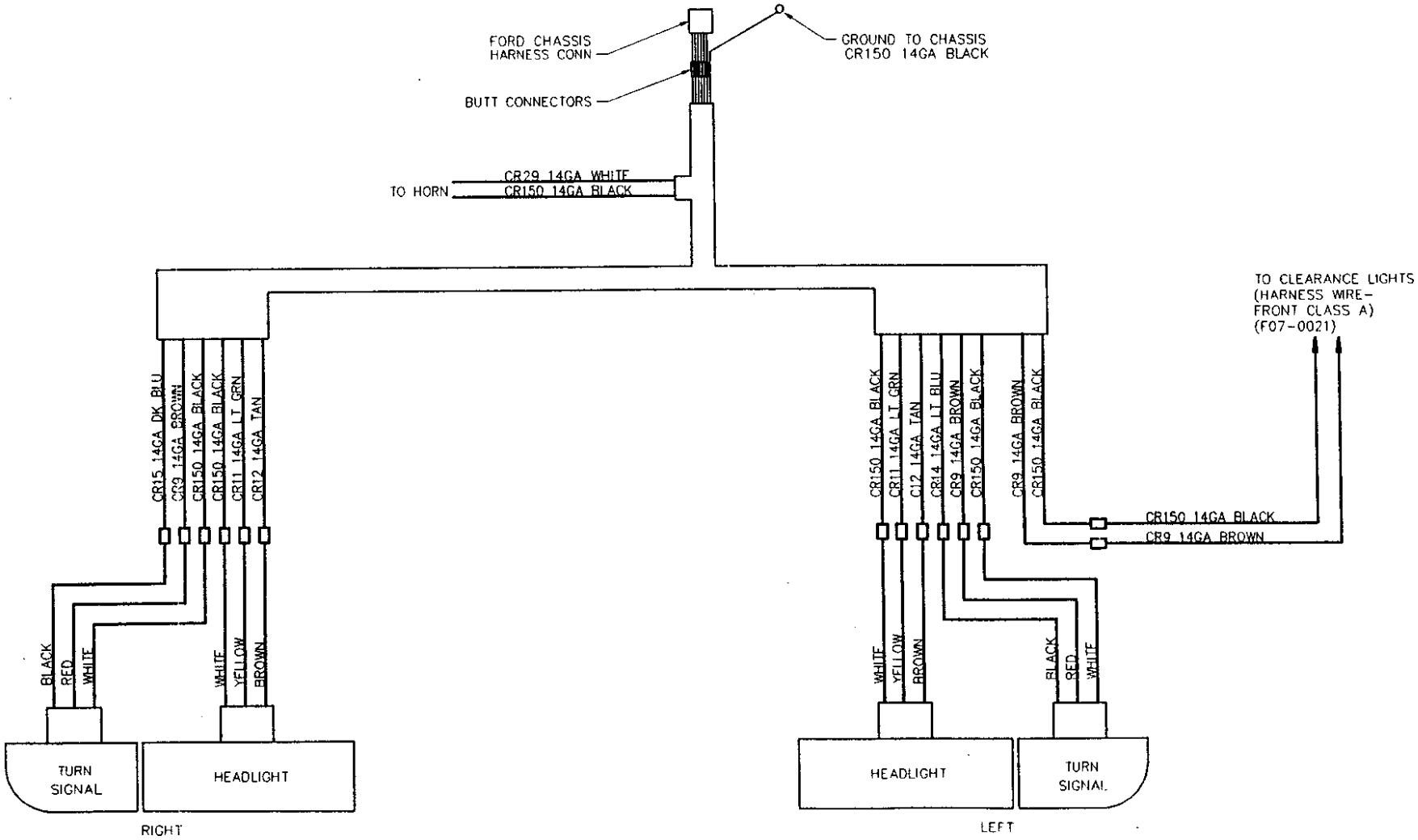

D.C. RELEASE	DESCRIPTION	DATE	BY	SCALE: 12" = 1'-0"	USED ON:	FLEETWOOD RECREATIONAL VEHICLE GROUP	PAGE NO. 777-21-17200
				DRAWN: S.STACHOWSK DATE: 10-10-95			SHEET 2 OF 3
				PROJECT: 97777300		TITLE: HEADLAMP/SIGNAL LAMP WIRING - FORD	
97-00		03-27-96	DM	PLOT: 03/27/96 18:19:49 01milled	AUX INFO.		

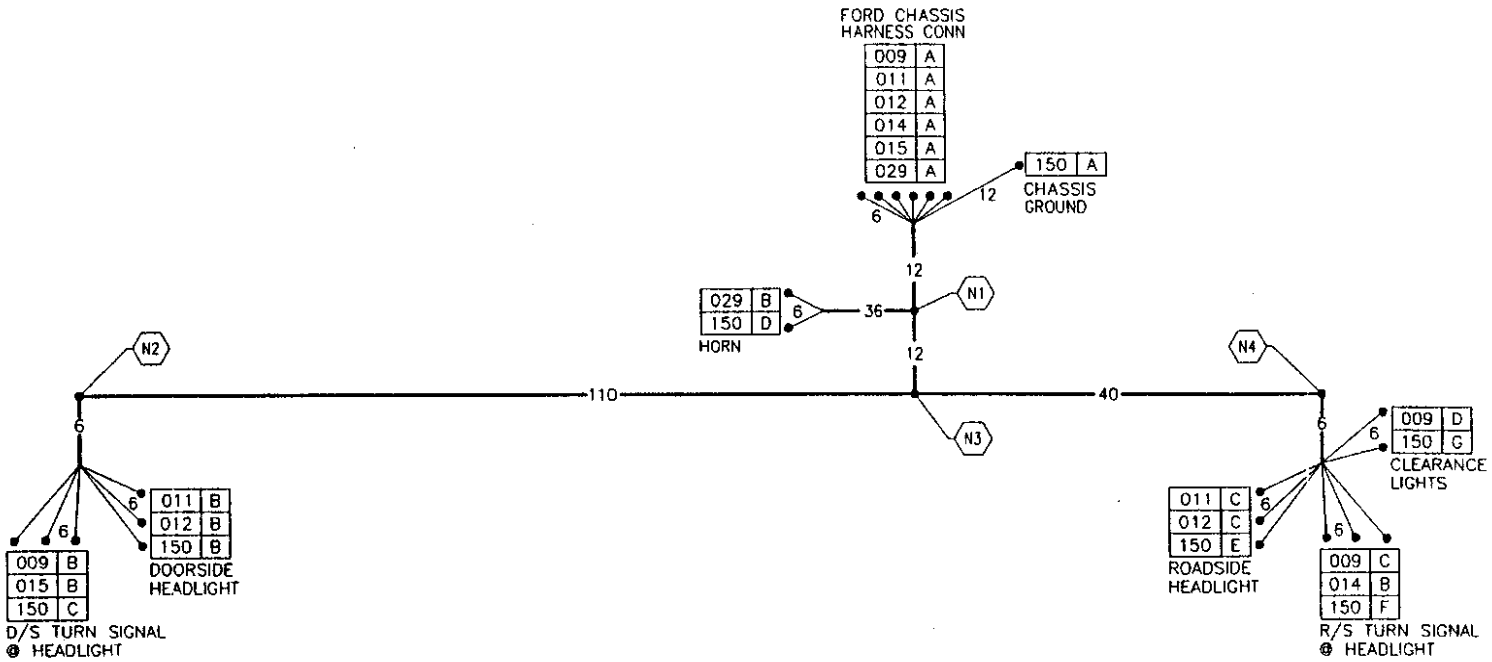

HEADLIGHT HARNESS

D.C. RELEASE	DESCRIPTION	DATE	BY	SCALE 12" = 1'-0"	USED ON:
				DRAWN S.STACHOWSK DATE 10-10-95	
				PROJECT: 97777300	
97-00		03-27-96	DM	PLOT: 03/27/96 18:20:14 01milled	AUX. INFO.

FLEETWOOD RECREATIONAL VEHICLE GROUP

PAGE NO. 777-21-17200

SHEET 3 OF 3

TITLE: HEADLAMP/SIGNAL LAMP WIRING - FORD

F/CIR.#	GA	COLOR	END	CONNECTOR	PIN	TERMINAL #	LENGTH	TERMINAL #	PIN	CONNECTOR	END	NOTES
009	14	BROWN	A	-	-	MLX NC-1610	152	MLX SBB-16-14	-	-	B	TO D/S TURN SIGNAL @ HEADLIGHT
009	14	BROWN	-	-	-	MLX NC-1610	52	MLX SBB-16-14	-	-	C	SPLICE @ 009 AB N3/ R/S TURN SIG @ HDLT
009	14	BROWN	-	-	-	MLX NC-1610	12	MLX SBB-16-14	-	-	D	SPLICE @ 009 C N4/ CLEARANCE LIGHTS
011	14	LT GRN	A	-	-	MLX NC-1610	152	MLX SBB-16-14	-	-	B	TO DOORSIDE HEADLIGHT
011	14	LT GRN	A	-	-	MLX NC-1610	52	MLX SBB-16-14	-	-	C	SPLICE @ 011 AB N3/ ROADSIDE HEADLIGHT
012	14	TAN	A	-	-	MLX NC-1610	152	MLX SBB-16-14	-	-	B	TO DOORSIDE HEADLIGHT
012	14	TAN	-	-	-	MLX NC-1610	52	MLX SBB-16-14	-	-	C	SPLICE @ 011 AB N3/ ROADSIDE HEADLIGHT
014	14	LT BLU	A	-	-	MLX NC-1610	82	MLX SBB-16-14	-	-	B	TO R/S TURN SIGNAL @ HEADLIGHT
015	14	DK BLU	A	-	-	MLX NC-1610	152	MLX SBB-16-14	-	-	B	TO D/S TURN SIGNAL @ HEADLIGHT
029	14	WHITE	A	-	-	MLX NC-1610	60	MLX FLAG 16-14	-	-	B	TO HORN
150	14	BLK	A	-	-	MLX-637-10X	158	MLX SBB-16-14	-	-	B	TO DOORSIDE HEADLIGHT
150	14	BLK	-	-	-	MLX NC-1610	12	MLX SBB-16-14	-	-	C	SPLICE @ 150 AB N2/ D/S TURN SIG @ HDLT
150	14	BLK	-	-	-	MLX NC-1610	42	MLX FLAG 16-14	-	-	D	SPLICE @ 150 AB N1/ HORN
150	14	BLK	-	-	-	MLX NC-1610	52	MLX SBB-16-14	-	-	E	SPLICE @ 150 AB N3/ ROADSIDE HEADLIGHT
150	14	BLK	-	-	-	MLX NC-1610	12	MLX SBB-16-14	-	-	F	SPLICE @ 150 E N4/ R/S TURN SIG @ HDLT
150	14	BLK	-	-	-	MLX NC-1610	12	MLX SBB-16-14	-	-	G	SPLICE @ 150 E N4/ CLEARANCE LIGHTS

D.C. RELEASE	DESCRIPTION	DATE	BY	SCALE 3" = 1'-0"	USED ON:	FLEETWOOD RECREATIONAL VEHICLE GROUP	PAGE NO. 777-19-04800
				DRAWN: G.MAGANA DATE 12-08-95			SHEET 1 OF 3
97-00	NEW DRAWING	04-11-96	RT	PROJECT: 97777304		TITLE: J-BOX DETAILS @ SLIDEOUT	
97-04	ECL #005	07-18-96	BS	PLOT: 07/18/96 15:35:11 01spinub	AUX INFO		

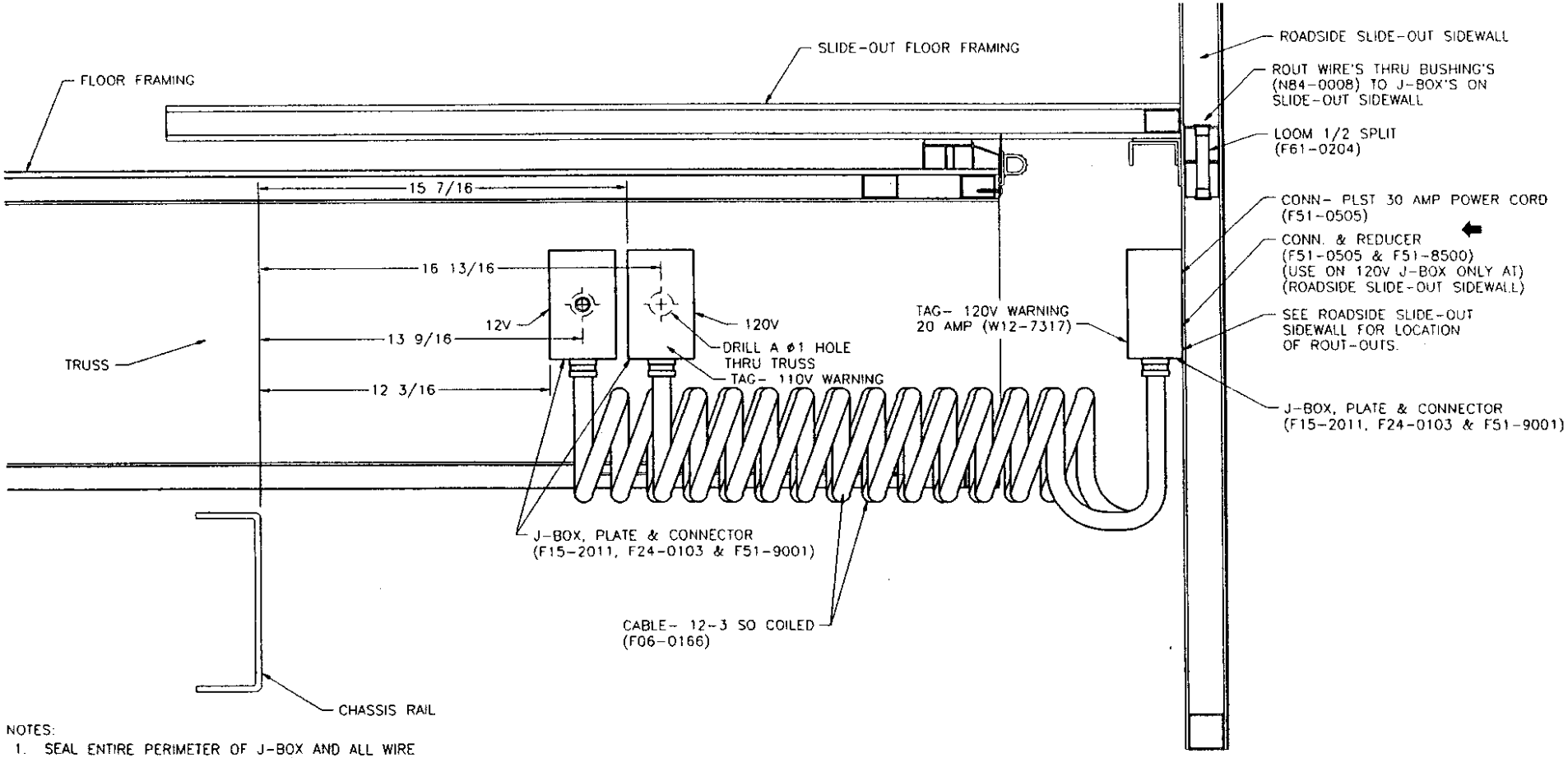

NOTES:

1. SEAL ENTIRE PERIMETER OF J-BOX AND ALL WIRE ENTRIES USING SEALANT- SEAM (R14-0317)
2. DRILL (2) 3/16 DIA HOLES IN J-BOX AND MOUNT TO SURFACE USING SCREW- SHTML #8 X 5/8 (M59-0804)
3. SEE PAGE #3 FOR 12V AND 120V WIRING DIAGRAM.

D.C. RELEASE	DESCRIPTION	DATE	BY	SCALE: 3" = 1'-0"	USED ON:	FLEETWOOD RECREATIONAL VEHICLE GROUP	PAGE NO. 777-19-04800
				DRAWN: G.MAGANA / DATE: 12-08-95			SHEET 2 OF 3
97-00	NEW DRAWING	03-22-96	RM	PROJECT: 97777304		TITLE: J-BOX DETAILS @ SLIDEOUT	
97-04	ECL #005	07-18-96	BS	PLOT: 07/18/96 15:36:17 01spinub	AUX. INFO		

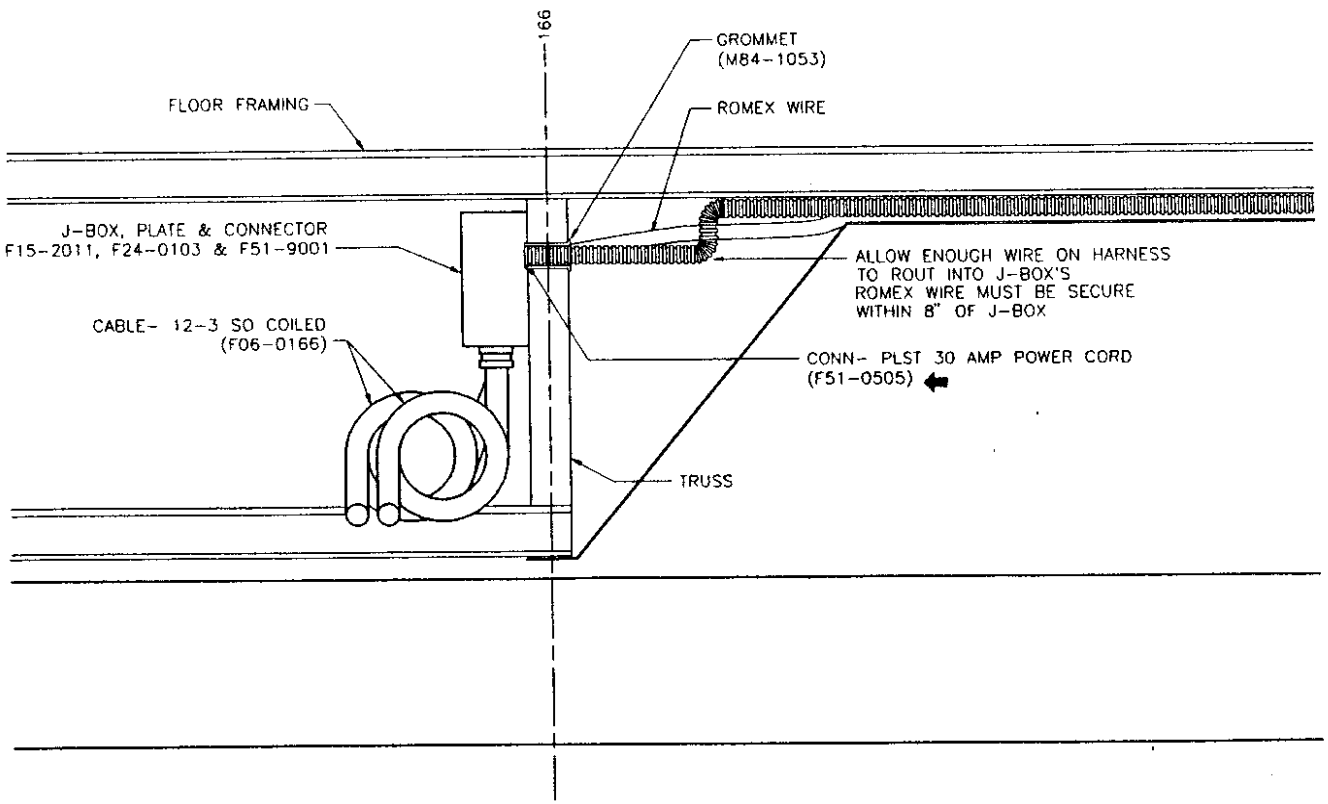

D.C. RELEASE	DESCRIPTION	DATE	BY	SCALE: 9" = 1'-0"	USED ON:	FLEETWOOD RECREATIONAL VEHICLE GROUP	PAGE NO. 777-19-04800
				DRAWN: G.MAGANA / DATE: 12-08-95			SHEET 3 OF 3
				PROJECT: 97777300		TITLE: J-BOX DETAILS @ SLIDEOUT	
97-00	NEW DRAWING	02-28-96	SL	PLOT: 02/28/96 15:16:56 01lanes	AUX INFO.		

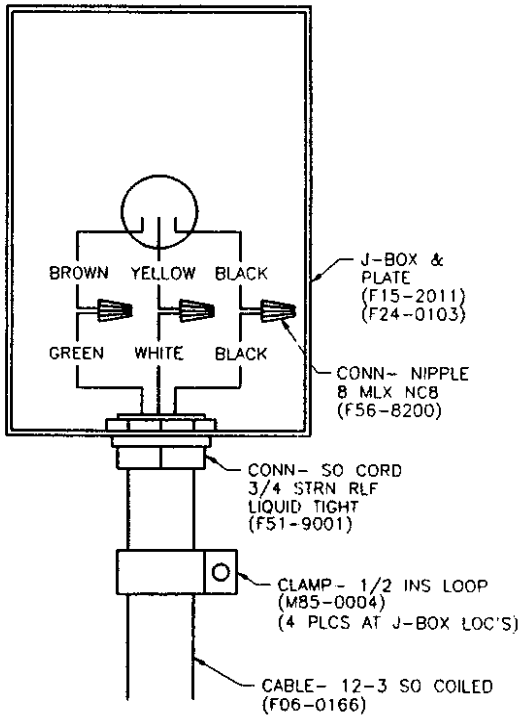

12V ELECTRICAL
(J-BOX ON TRUSS)

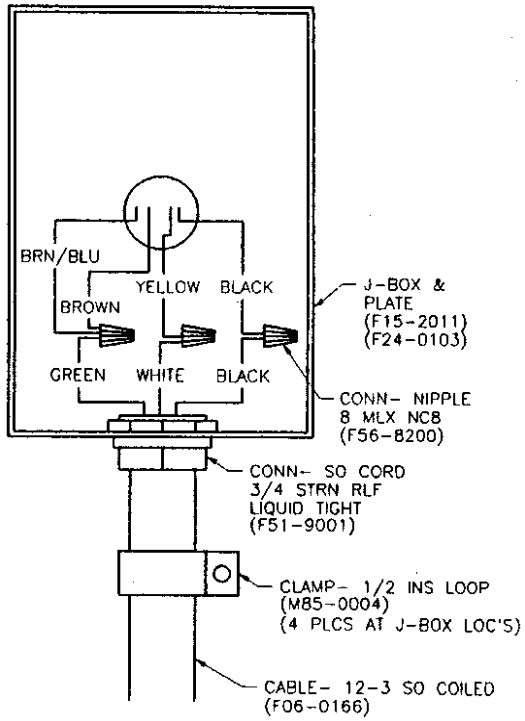

12V ELECTRICAL
(J-BOX ON SLIDEOUT)

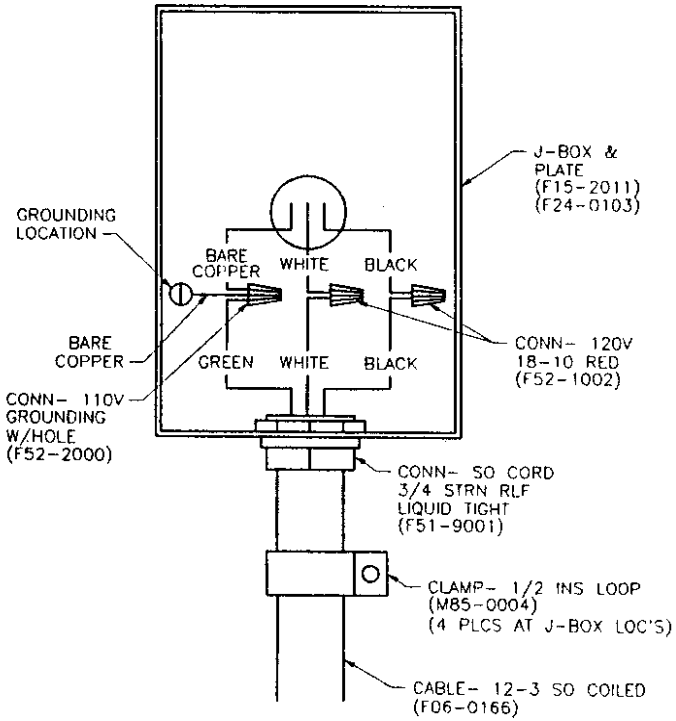

120V ELECTRICAL
(TYP. BOTH BOXES)

D.C. RELEASE	DESCRIPTION	DATE	BY	SCALE 3/4"" = 1'-0"	USED ON:	FLEETWOOD RECREATIONAL VEHICLE GROUP	PAGE NO. 777-26-90955
				DRAWN: K.SEIDEL / DATE: 08-23-95			SHEET 1 OF 1
				PROJECT: 97777300		TITLE: TAIL & CLEARANCE LIGHT INSTALL INFO	
97-00		04-01-96	DM	PLOT: 04/01/96 16:55:25 01milled	AUX. INFO.		

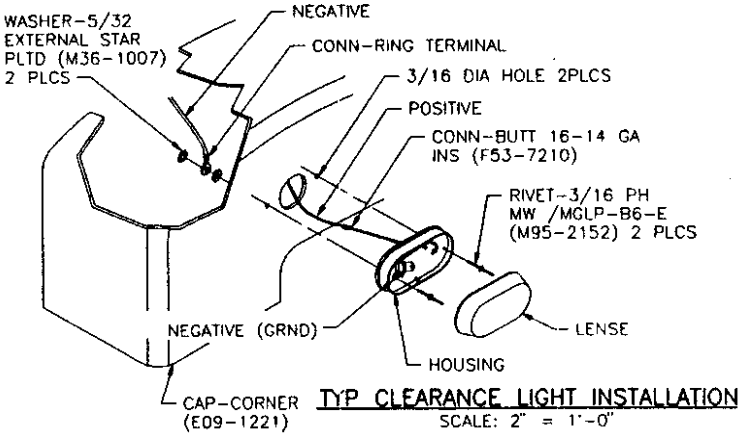

TYP CLEARANCE LIGHT INSTALLATION
SCALE: 2" = 1'-0"

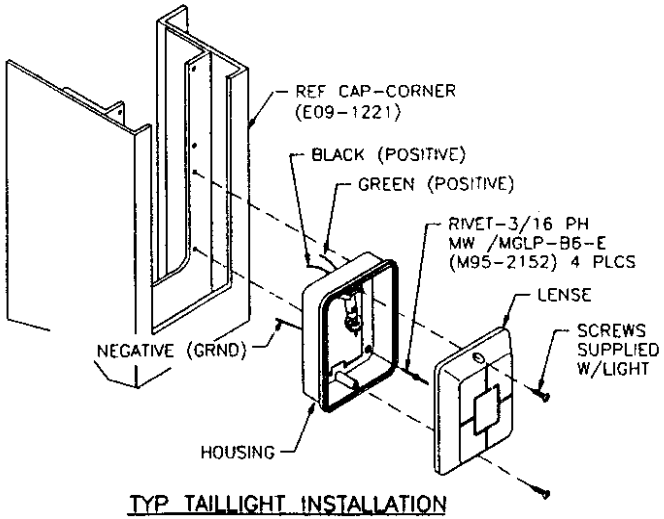

TYP TAILLIGHT INSTALLATION
SCALE: 2" = 1'-0"

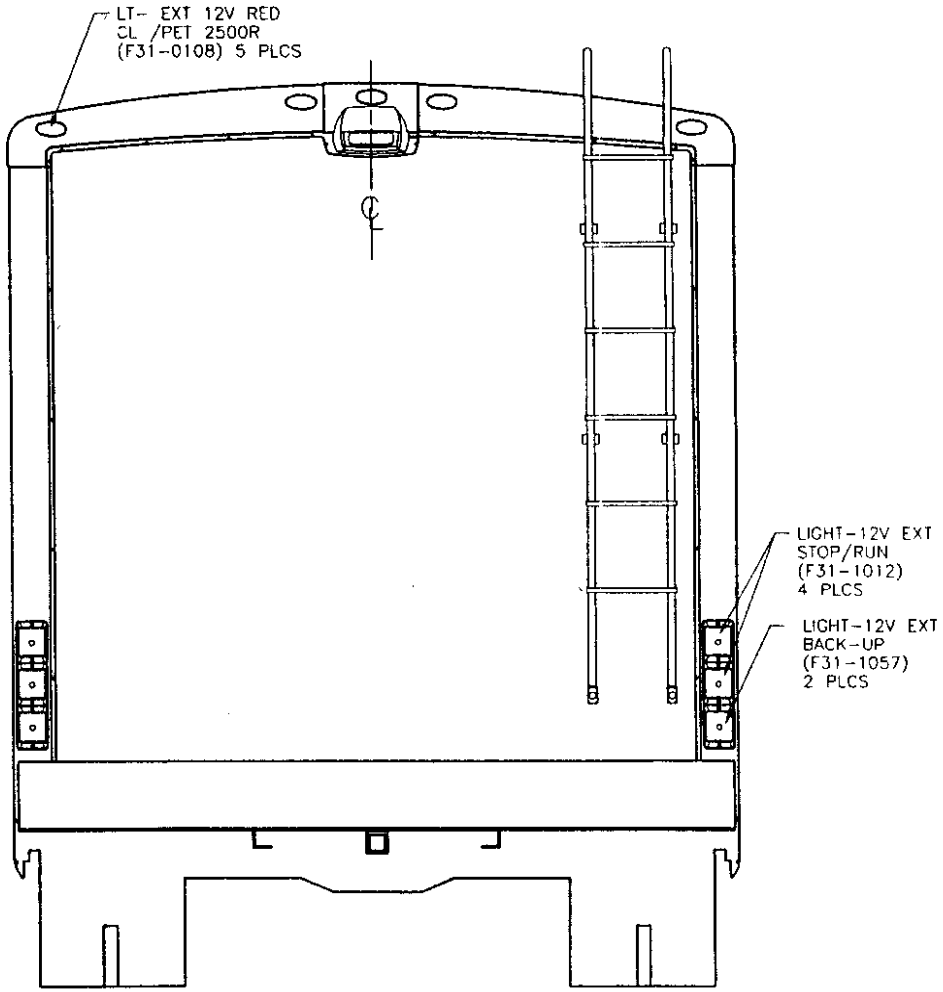

D.C. RELEASE	DESCRIPTION	DATE	BY	SCALE: 3/4" = 1'-0"	USED ON:	FLEETWOOD RECREATIONAL VEHICLE GROUP	PAGE NO. 777-26-90956
				DRAWN: F.OCHOA / DATE: 03-06-95			SHEET 1 OF 1
				PROJECT: 97777300		TITLE: PORCH LIGHT & GRAB BAR INSTALL INFO	
97-00		04-01-96	DM	PLOT: 04/01/96 16:56:13 01milled	AUX. INFO.		

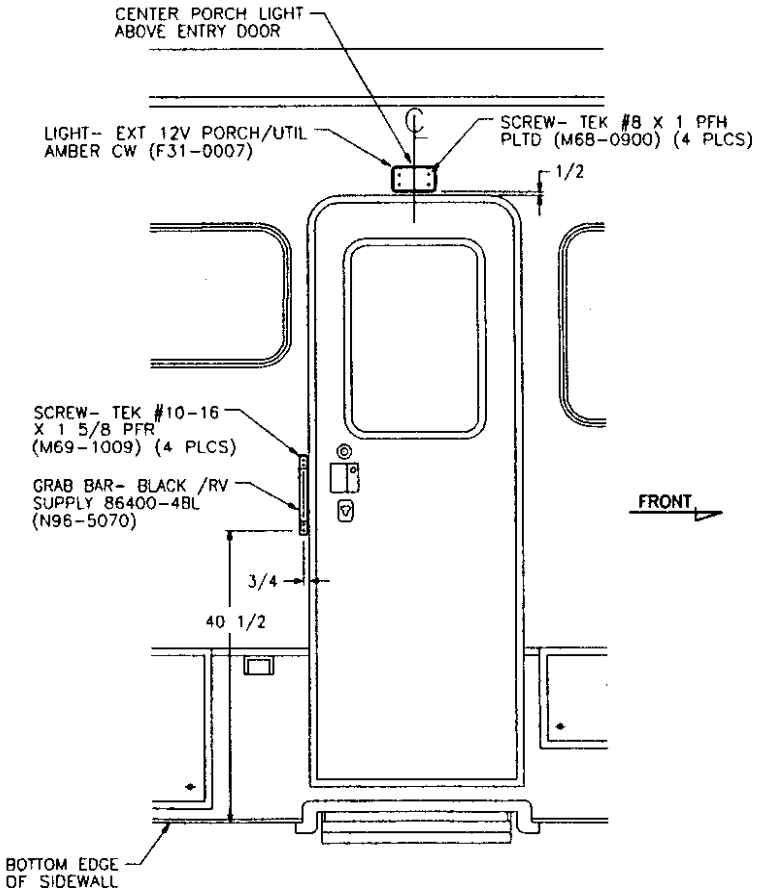

10.99

D.C. RELEASE	DESCRIPTION	DATE	BY	SCALE: 1" = 1'-0"	USED ON:	FLEETWOOD RECREATIONAL VEHICLE GROUP	PAGE NO. 777-26-90973
				DRAWN: F.OCHOA / DATE: 03-06-95			SHEET 1 OF 1
				PROJECT: 97777300		TITLE: REARVIEW MIRRORS INSTALLATION	
97-00		04-08-96	RT	PLOT: 04/08/96 07:30:20 01torrer	AUX INFO.		

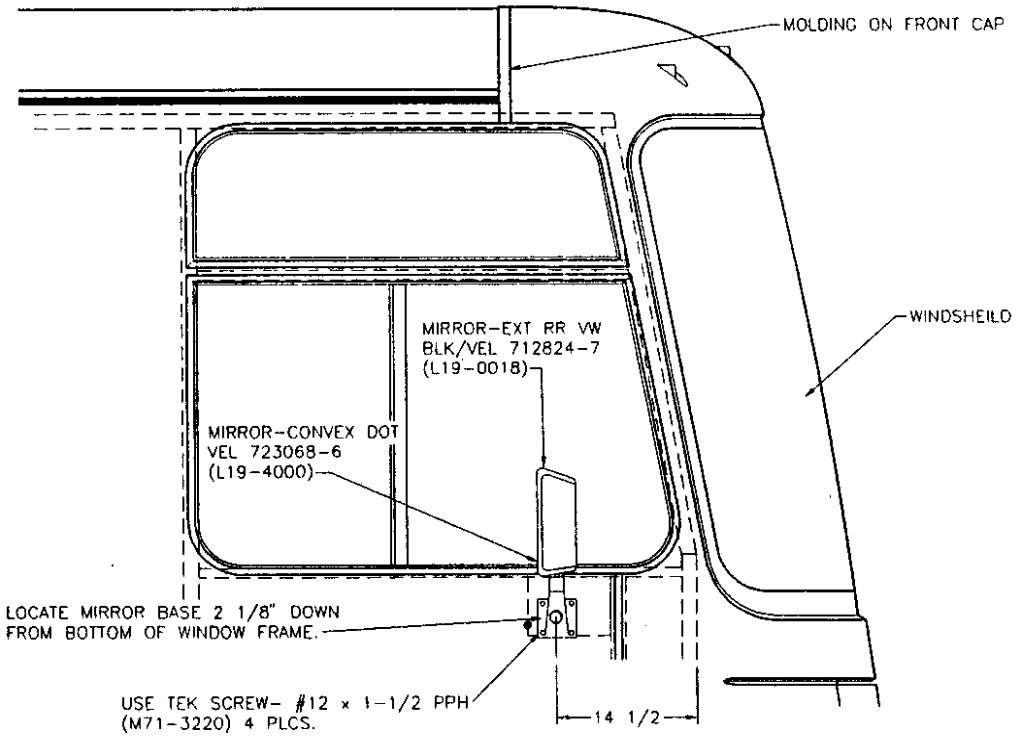

MIRROR INSTALLATION
PASSENGER SIDE SHOWN
DRIVER SIDE OPPOSITE

D.C. RELEASE	DESCRIPTION	DATE	BY	SCALE 12" = 1'-0"	USED ON:	FLEETWOOD RECREATIONAL VEHICLE GROUP	PAGE NO. 777-28-10000
				DRAWN: J. LOCKHART DATE: 09-12-95			SHEET 1 OF 2
				PROJECT: 97777300		TITLE: RADIO/TAPE AM/FM/MX	
97-00		04-11-96	RT	PLOT: 04/11/96 16:50:41 01torrer	AUX INFO.		

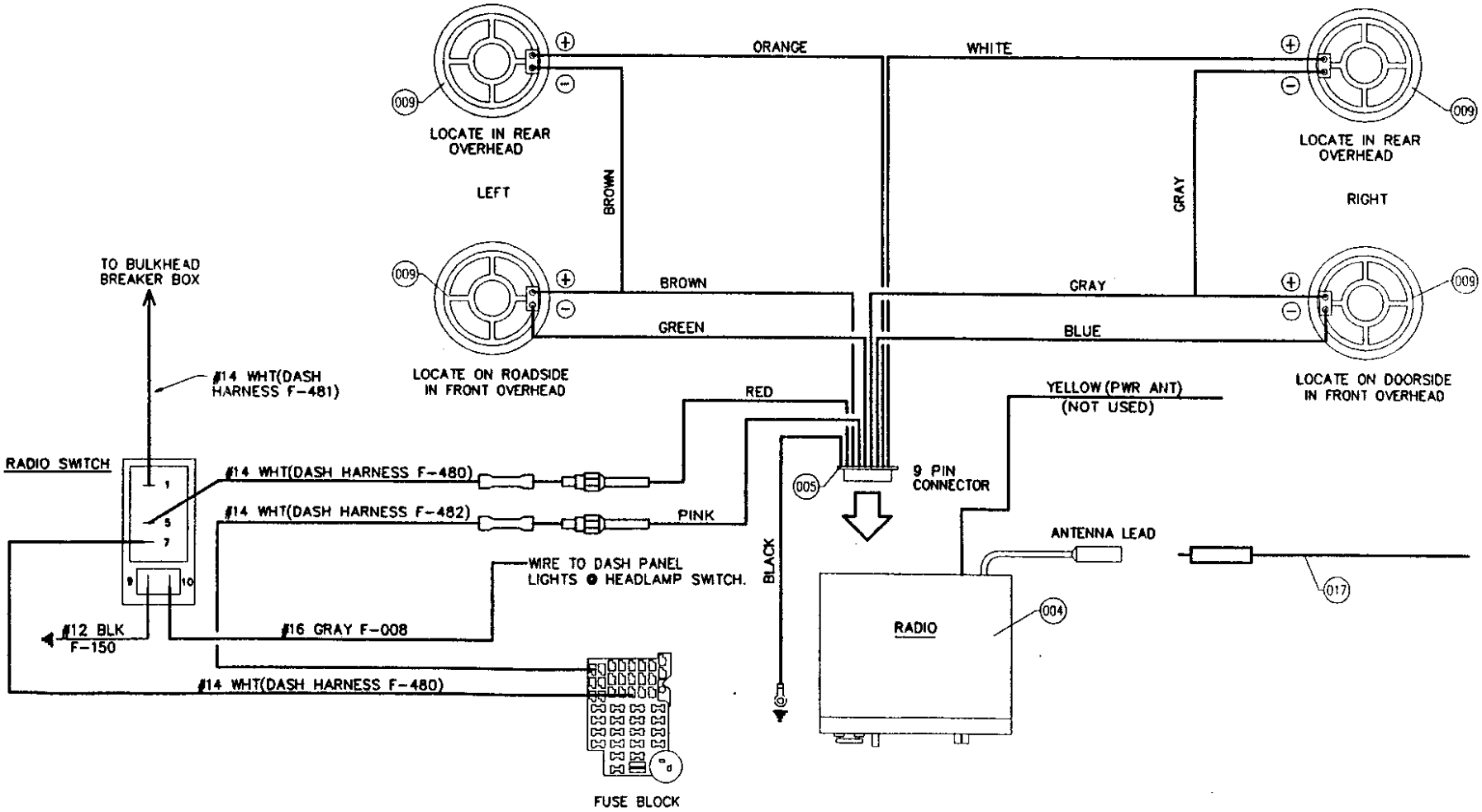

D.C. RELEASE	DESCRIPTION	DATE	BY	SCALE: 1" = 1'-0"	USED ON:	FLEETWOOD RECREATIONAL VEHICLE GROUP	PAGE NO. 777-43-26951
				DRAWN: B.NEWELL / DATE 04-26-95			SHEET 1 OF 1
				PROJECT: 97777300		TITLE: GENERATOR 12 VOLT ROUTING INFO	
97-00		04-01-96	DM	PLOT: 04/01/96 18:24:43 01milled	AUX. INFO.		

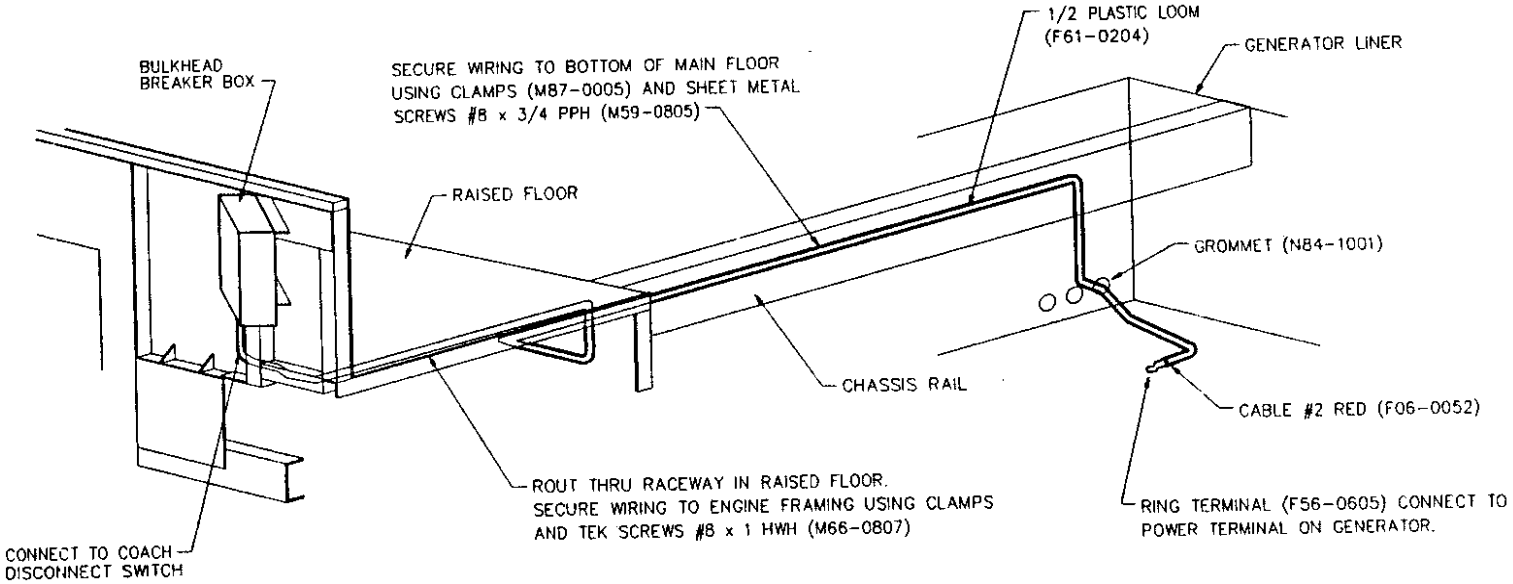

NOTES:
1. WIRING TO BE SECURED AT 18 O.C. (MAX).
2. SEE (777-01-19200) FOR GEN FUEL LINE ROUNTING.

D.C. RELEASE	DESCRIPTION	DATE	BY	SCALE: 12" = 1'-0"	USED ON:	FLEETWOOD RECREATIONAL VEHICLE GROUP	PAGE NO: 777-44-00554
				DRAWN: B.NEWELL DATE: 04-26-95			SHEET 1 OF 1
				PROJECT: 97777300		TITLE: CSA DAYTIME RUNNING LIGHT	
97-00		04-02-96	DM	PLOT: 04/02/96 17:28:36 01milled	AUX. INFO.		

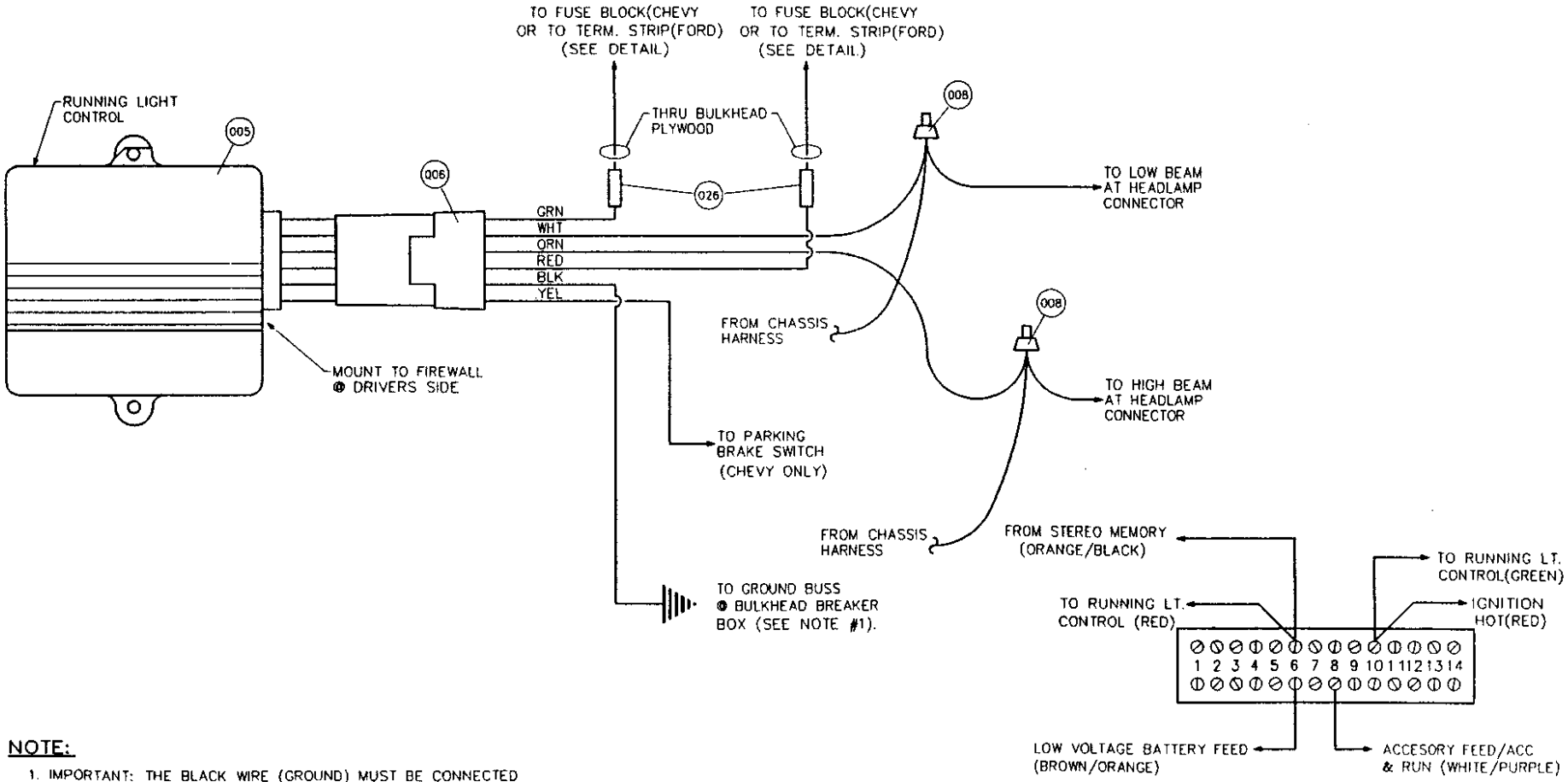

NOTE:

1. IMPORTANT: THE BLACK WIRE (GROUND) MUST BE CONNECTED FIRST BEFORE ANY OTHER CONNECTIONS ARE MADE. FAILURE TO DO SO WILL INVALIDATE THE WARRANTY.

D.C. RELEASE	DESCRIPTION	DATE	BY	SCALE: 3/4" = 1'-0"	USED ON:	FLEETWOOD RECREATIONAL VEHICLE GROUP	PAGE NO. 777-49-06000
				DRAWN: F.OCHOA / DATE: 05-02-95			SHEET 1 OF 4
				PROJECT: 97777300		TITLE: REAR VISION CAMERA	
97-00		04-02-96	DM	PLOT: 04/02/96 18:03:42 01milled	AUX INFO.		

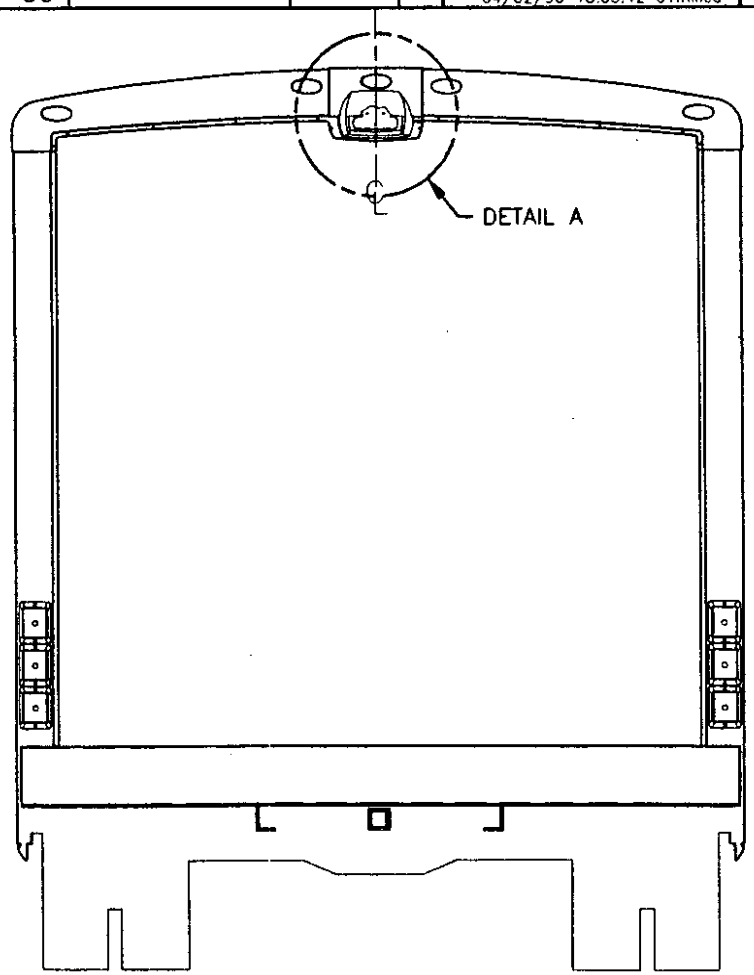

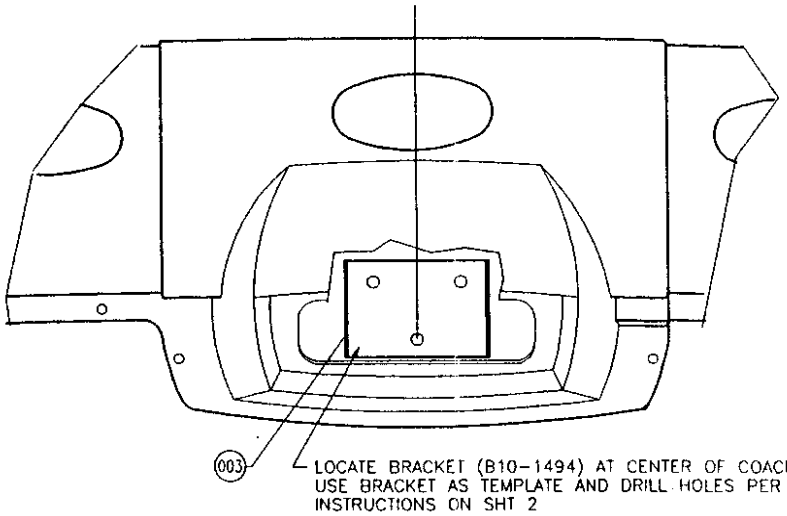

DETAIL A
SCALE: 4" = 1'-0"

D.C. RELEASE	DESCRIPTION	DATE	BY	SCALE 4 1/2" = 1'-0"	USED ON:	FLEETWOOD RECREATIONAL VEHICLE GROUP	PAGE NO. 777-49-06000
				DRAWN: F.OCHOA / DATE: 05-02-95			SHEET 2 OF 4
				PROJECT: 97777300		TITLE: REAR VISION CAMERA	
97-00		04-02-96	DM	PLOT: 04/02/96 18:04:11 01milled	AUX. INFO.		

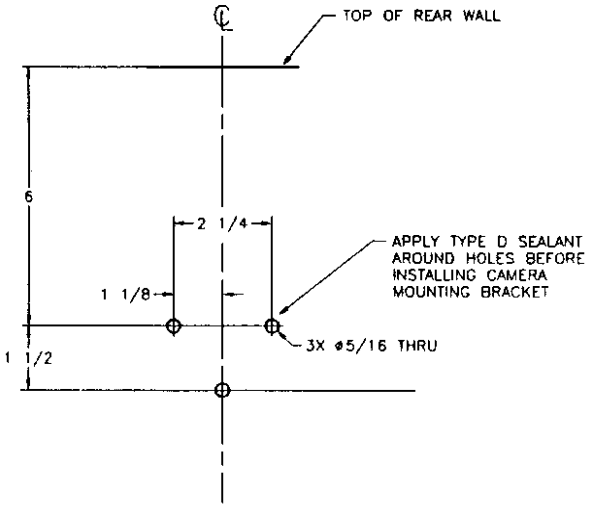

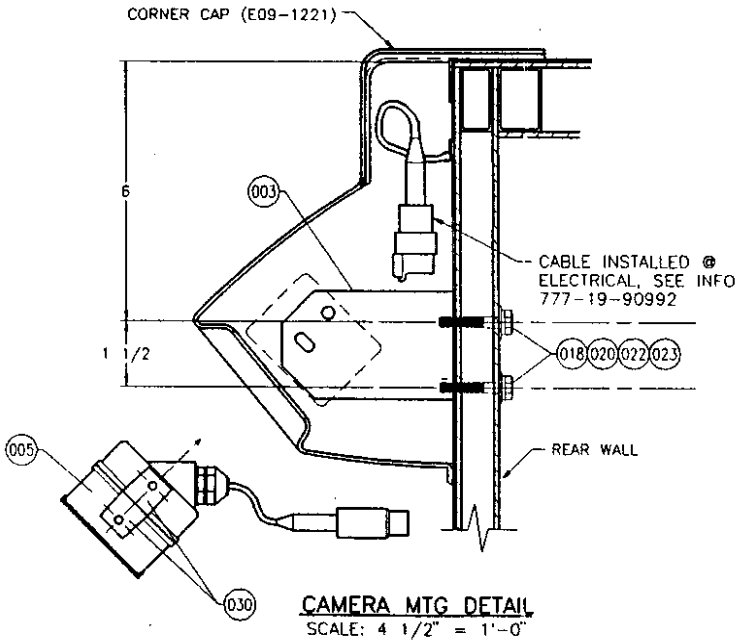

CAMERA MTG DETAIL
SCALE: 4 1/2" = 1'-0"

NOTES:

1. DRILL HOLES IN REAR WALL.
2. ATTACH CAMERA TO MOUNTING BRACKET W/VENDOR SUPPLIED HARDWARE.
3. ATTACH CAMERA ASSY TO REAR WALL W/1/4-20 X 1 1/2 BOLT (M06-1010), 1/4 WASHERS (M31-1010), 1/4 LOCKWASHERS (M32-1010) 3 PLCS EA. & NUT (M21-0010).
4. COMPLETE CONNECTION TO CAMERA.
5. REPLACE OR INSTALL CORNER CAP (E09-1221).

D.C. RELEASE	DESCRIPTION	DATE	BY	SCALE: 3/4" = 1'-0"	USED ON:	FLEETWOOD RECREATIONAL VEHICLE GROUP	PAGE NO. 777-49-06000
				DRAWN: F.OCHOA DATE: 05-02-95			SHEET 3 OF 4
				PROJECT: 97777300		TITLE: REAR VISION CAMERA	
97-00		04-02-96	DM	PLOT: 04/02/96 18:04:43 01milled	AUX INFO.		

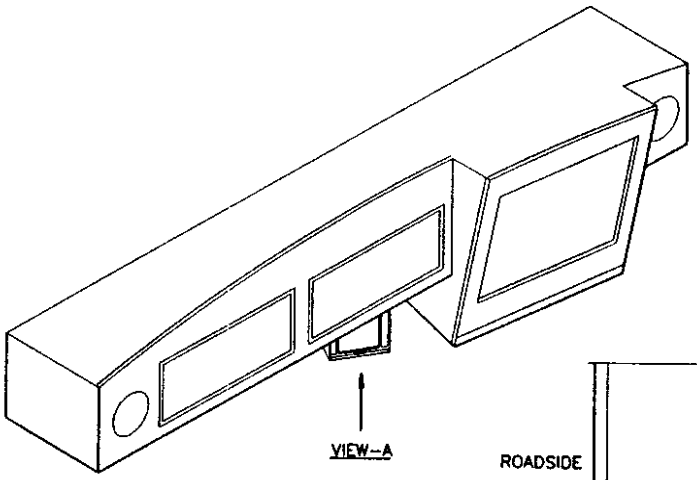

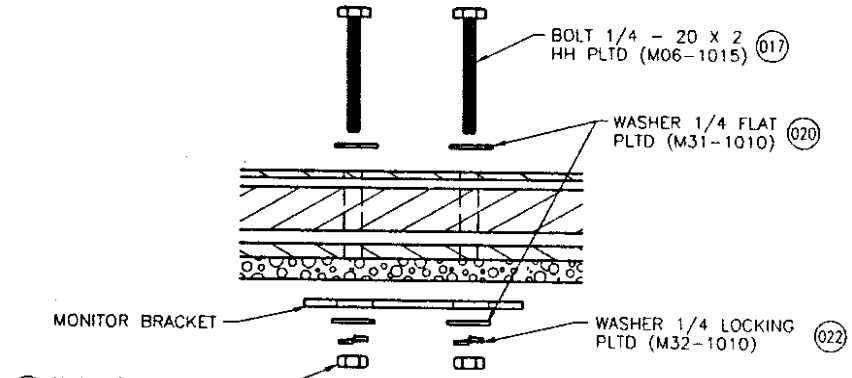

SECTION-B
SCALE: 6" = 1'-0"

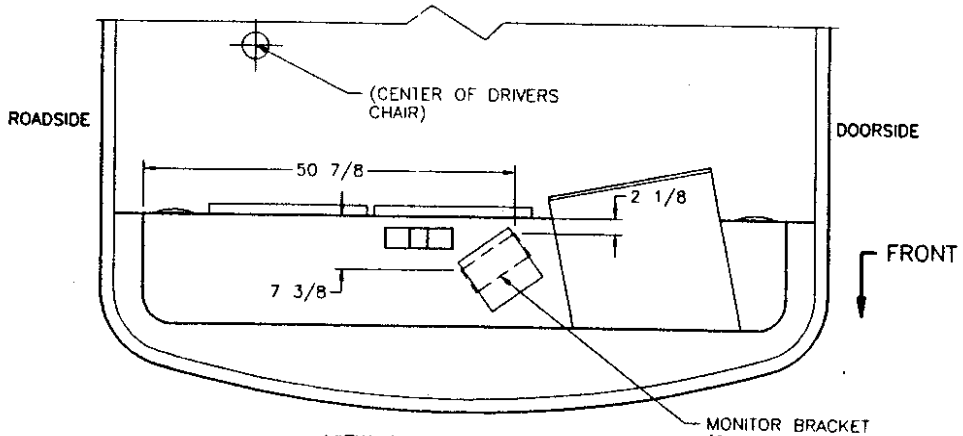

VIEW A LOOKING UP
AT BOTTOM OF OVERHEAD STRUCTURE

NOTES:

1.. LOCATE MONITOR BRACKET AS SHOWN. USING BRACKET AS TEMPLATE MARK HOLE LOCATIONS AT CENTER OF SLOTS THEN DRILL (4) 5/16 HOLES THROUGH OVERHEAD.
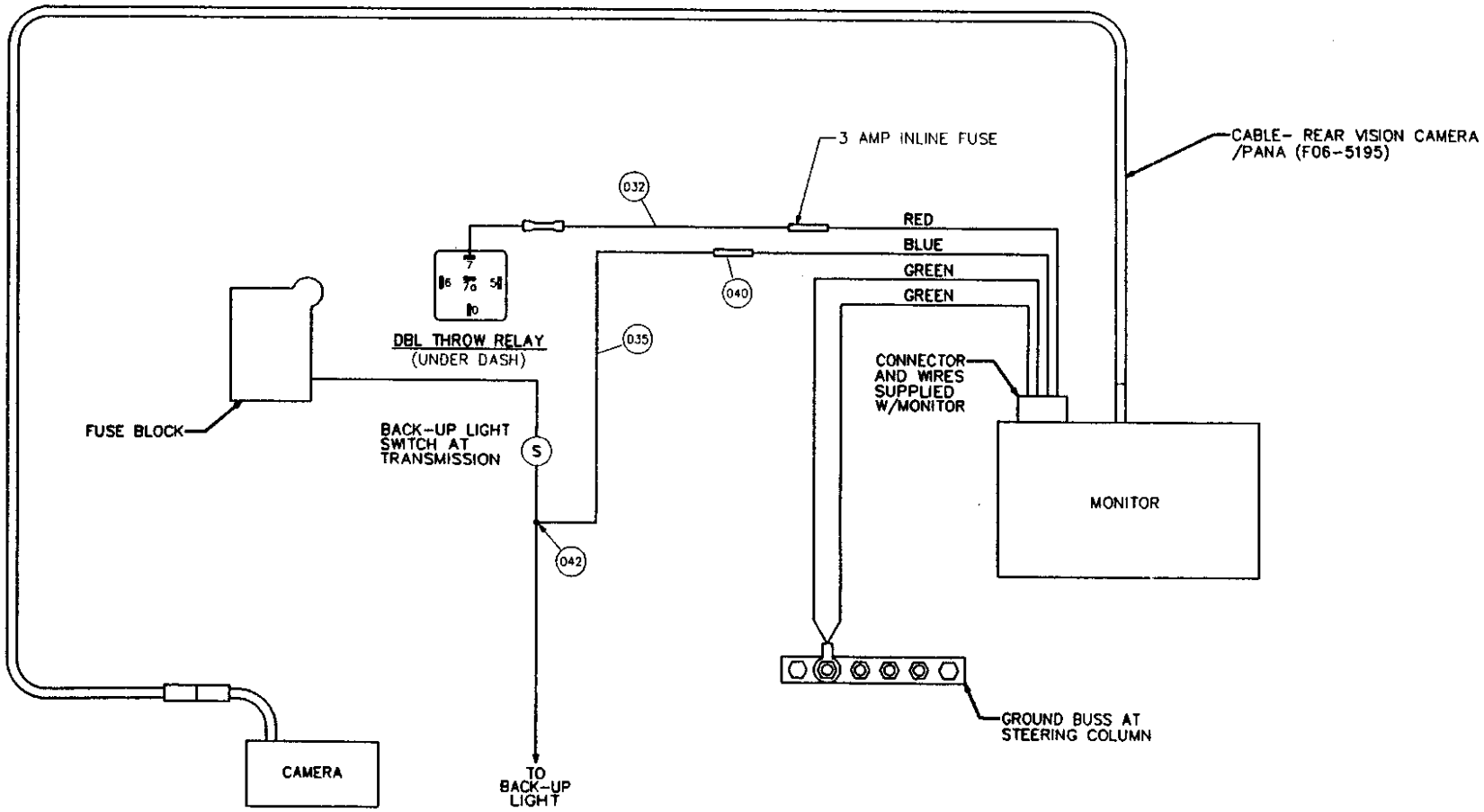
D.C. RELEASE	DESCRIPTION	DATE	BY	SCALE: 6" = 1'-0"	USED ON:	FLEETWOOD RECREATIONAL VEHICLE GROUP	PAGE NO. 777-49-06000
				DRAWN: F.OCHOA DATE: 05-03-95			SHEET 4 OF 4
				PROJECT: 97777300		TITLE: REAR VISION CAMERA	
97-00		04-02-96	DM	PLOT: 04/02/96 18:05:12 01milled	AUX INFO.